ED50/100/250

Swing door operators in overhead concealed header

Setup and Troubleshooting Instructions

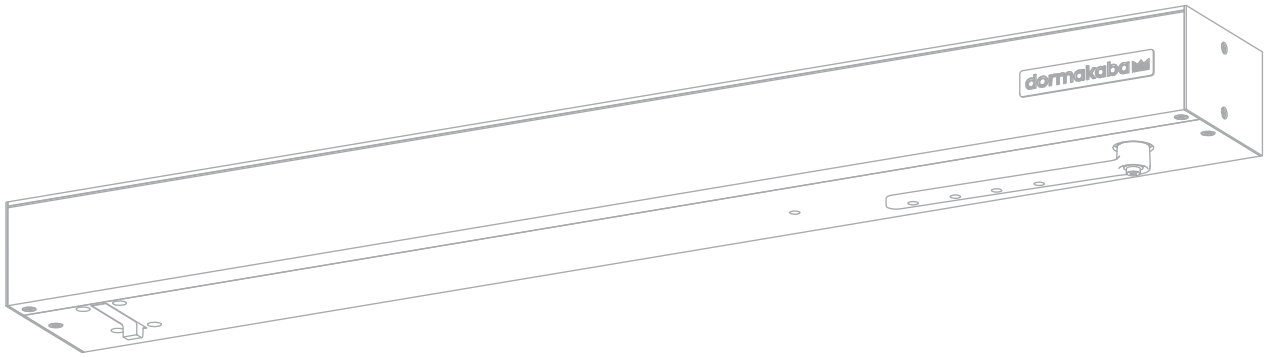

DL4617-003 - 09/2026
Original document

EN

Table of contents

1	**General information**	**4**
1.1	General information	4
2	**ED50/100/ED250 OHC product description**	**5**
3	**ED50/100/ED250 OHC door configurations**	**6**
3.1	OHC single door configurations	6
3.2	OHC pair door and double egress door configurations	6
4	**Technical data**	**7**
4.1	ED50/100/ED250 technical data	7
4.2	Operating specifications	8
5	**Safety information**	**9**
6	**ED50/ED100/ED250 User interface**	**10**
6.1	Overview	10
6.2	4 button keypad and display	10
6.3	Operator status LEDs	11
6.4	Mode switch and Exit Only switch panel	12
6.5	ED50/ED100/ED250 automatic and manual modes	13
6.6	Low and full energy doors	13
7	**System accessories**	**14**
7.1	System accessory electrical connections	14
7.2	System accessories	14
8	**Terminal board connections**	**15**
9	**ED50/ED100/ED250 door signage**	**16**
9.1	Full energy operator	16
9.2	Low energy operator	16
9.3	Door signage, full energy single swing doors (ANSI/BHMA A156.10)	17
9.4	Door signage, low energy single swing doors (ANSI/BHMA A156.19)	17
9.5	Door signage, full energy pair swing doors (ANSI/BHMA A156.10)	18
9.6	Door signage, low energy pair swing doors (ANSI/BHMA A156.19)	19
9.7	Door signage, full energy double egress swing doors (ANSI/BHMA A156.19)	20
9.8	Safety label, automatic swing doors	21
9.9	Safety label, low energy swing doors	21
10	**Parameters**	**22**
10.1	ED50/ED100/ED250 OHC – viewing and changing parameters	22
10.2	Configuration parameters	22
10.3	Driving parameters	22
11	**System setup for single door installation**	**24**
11.1	Set operator spring tension	24
11.2	Set braking circuit plug position	25
11.3	ED50/ED100/ED250 OHC power on	26
11.4	Set installation type parameter **AS**	**27**
11.5	Set door width parameter **Tb**	**28**
11.6	Set OHC reveal depth parameter **rd** = 0	29
11.7	Set door type parameter **dL**	**30**
11.8	Perform partial learning cycle to rotate arm to door installation position	31
12	**Single door installation**	**33**
12.1	Customer supplied single door - installation	33
12.2	Install floor pivot shaft bearing	33
12.3	Hang door	34
12.4	Perform learning cycle	36
13	**Set power fail closing speed**	**37**
13.1	Set power fail closing speed	37
14	**Pair door installation**	**38**
14.1	Customer supplied doors - pair door installation	38
14.2	Perform learning cycle for each door	38
14.3	Set power fail closing speed	38
15	**Pair door parameters, Sync cable**	**39**
15.1	Set ED operator parameters for pair door operation	39
15.2	Connect Sync cable between ED50/ED100/ED250 operators	40
16	**Reserved**	**41**
17	**Connect accessory wiring**	**41**
17.1	Connect accessory wiring, single door	41
17.2	Connect accessory wiring, double doors	41
18	**Install door signage, header cover**	**42**
18.1	Install door signage	42
18.2	Install header cover	42
19	**ANSI/BHMA standards**	**43**
19.1	Power operated pedestrian doors (ANSI/BHMA 156.10)	43
19.2	Low energy power operated doors (ANSI/BHMA A156.19)	44
20	**Upgrade cards**	**46**
20.1	Upgrade cards	46
20.2	Container module	46
20.3	Installing upgrade cards	47

21 Maintenance 48
21.1 ED50/ED100/ED250 environment and cleaning 48
21.2 Operator status LEDs, maintenance interval 48
21.3 Overhead arm and bottom door pivot 49
21.4 ED50 brake maintenance 50
Appendix A - Driving parameters 52
A.1 Driving parameters – detail 52
Appendix B - Troubleshooting 62
B.1 Information and error codes 62
B.2 Red LED status codes 63
B.3 Troubleshooting chart, "In" codes 64
B.4 Troubleshooting chart, "E" codes 65
Appendix C - dormakaba handheld 68
C.1 dormakaba handheld terminal 68
C.2 New dormakaba handheld; language change to English 69
C.3 dormakaba handheld; firmware update 70

1 General information

1.1 General information

1.1.1 Door Installation, Setup, Maintenance and Troubleshooting Instructions.

This manual provides Setup, Maintenance and Troubleshooting instructions for ED50/ED100/ED250 overhead concealed (OHC) header door configurations.

1.1.2 OHC header Installation Instructions.

Reference ED50/ED100/ED250 OHC Installation Instructions DL4616-010.

1.1.3 ED50/ED100/ED250 OHC header Installation.

NOTICE

Exterior door use.
To ensure proper suitability for exterior door use, the following topics must be addressed in the context of the door application setting.

- Site-specific use factors such as high wind conditions and/or building pressure.
- Door width, height, weight, and usage patterns.
- Observable prevailing conditions at the opening under which the operator is expected to perform. In some instances, this may require increased force settings to counteract these conditions.
- Door mounted presence sensors.
  When attempting to overcome these forces, it is strongly suggested that door mounted presence sensors be employed to enhance pedestrian safety through the opening.

1.1.4 Manual storage.

This document must be kept in a secure place, and accessible for reference as required.
If the door system should be transferred to another facility, ensure that this document is transferred as well.

1.1.5 dormakaba.us website.

Manuals are available for review, download, and printing on the dormakaba.us website.

1.1.6 Dimensions

Unless otherwise specified, all dimensions are given in both inches (") and [mm].

1.1.7 Symbols used in these instructions.

WARNING

This symbol warns of hazards which could result in personal injury or threat to health.

CAUTION

This symbol warns of a potentially unsafe procedure or situation.

NOTICE

Draws attention to important information presented in this document.

TIPS AND RECOMMENDATIONS

Clarifies instructions or other information presented in this document.

Fig. 2.1 ED50/ED100/ED250 OHC with overhead arm

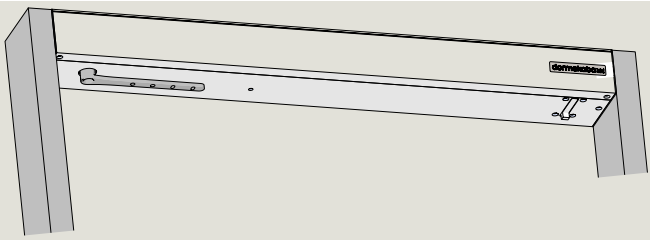

2 ED50/100/ED250 OHC product description

NOTICE

Door jambs, door(s) and installation by customer.

2.1 Intended use.

ED50/ED100/ED250 are electromechanical operators used exclusively for opening and closing interior or exterior swing doors. Reference Para. 1.1.3.

2.2 Packaging

ED50/ED100/ED250 operators are packaged in a header for overhead concealed (OHC) installation. For pair swing doors, two ED50/ED100/ED250 operators are packaged in a single header.

2.3 ED50/ED100/ED250 operators.

2.3.1 ED50

- Supplied only as a low energy operator. (ANSI/BHMA A156.19).

2.3.2 ED100

- Supplied as a low energy operator. (ANSI/BHMA A156.19).
- Configured as a full energy operator (ANSI/BHMA A156.10) using parameter adjustment.

2.3.3 ED250

- Supplied as a low energy operator. (ANSI/BHMA A156.19).
- Configured as a full energy operator (ANSI/BHMA A156.10) using parameter adjustment.

2.4 ED50/ED100/ED250 separate modules (Fig. 2.4).

2.4.1 Single door header; modules supplied:

- Low voltage wiring connection module.
- Main power module.

2.4.2 Pair door header; modules supplied:

- Two low voltage wiring connection modules.
- Two main power modules.

TIPS AND RECOMMENDATIONS

Ensure ED50/ED100/ED250 OHC header installation is qualified for use at the respective smoke or fire-rated door.

NOTICE

Door weights and ED operator low energy requirements.

- 400 to 500 pounds: It is recommended the ED operator(s) be configured for low energy.
- **500 to 800 pounds: The ED operators must be configured for low energy.**

2.5 Maximum door weights*.

*Maximum door weight is based on prevailing conditions at the door opening.

Door width		ED50 maximum door weight		ED100 maximum door weight		ED250 maximum door weight	
Inches	mm	Pounds - kg		Pounds - kg		Pounds - kg	
36	914.4	220	100	220	100	800	363
39	990.6	220	100	220	100	800	363
42	1067	220	100	220	100	800	363
48	1219	220	100	220	100	800	363

Fig. 2.2 ED100/ED250 OHC operator

Fig. 2.3 ED50 OHC operator

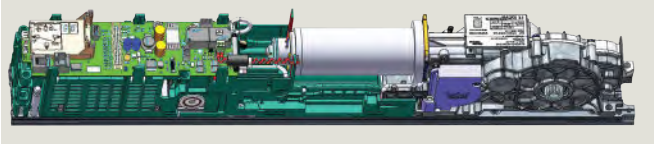

Fig. 2.4 Wiring module Main power module

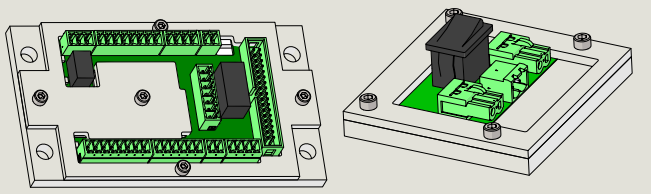

Fig. 2.5 Overhead arm

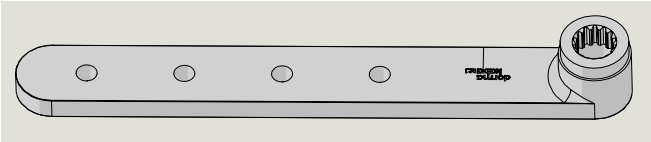

3 ED50/100/ED250 OHC door configurations

3.1 OHC single door configurations

Fig. 3.1.1 LH inswing RH inswing

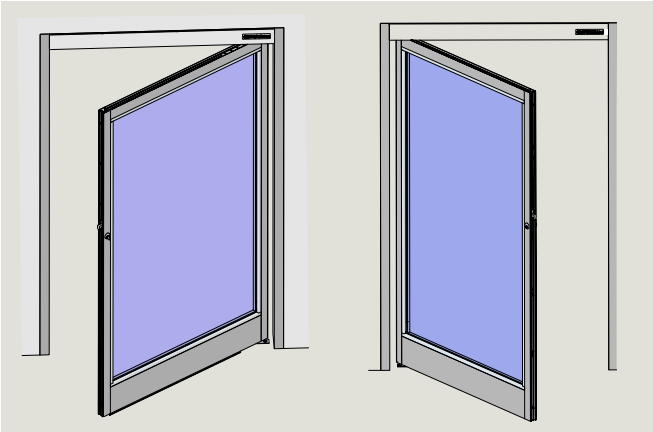

Fig. 3.1.2 LH outswing RH outswing

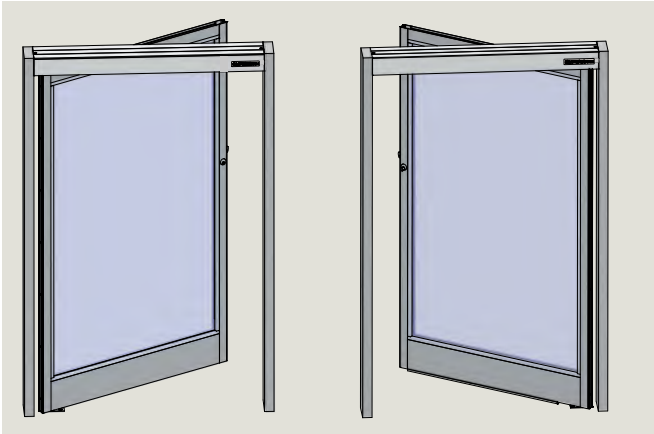

3.2 OHC pair door and double egress door configurations

Fig. 3.2.1 Outswing

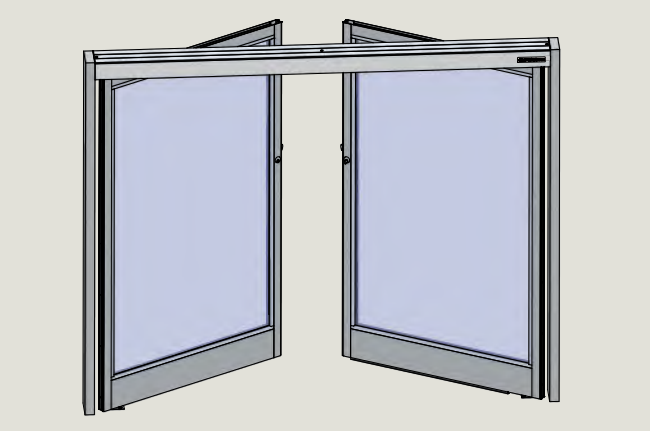

Fig. 3.2.3 Inswing

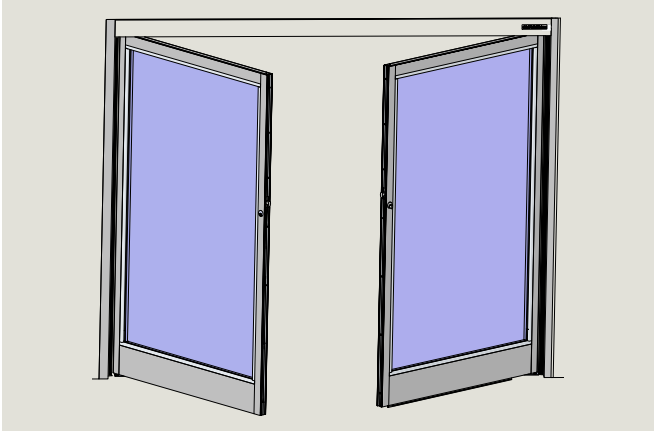

Fig. 3.2.2 LH double egress

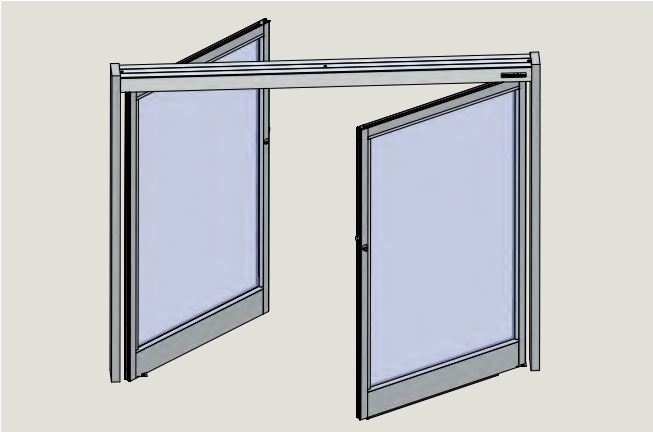

Fig. 3.2.4 RH double egress

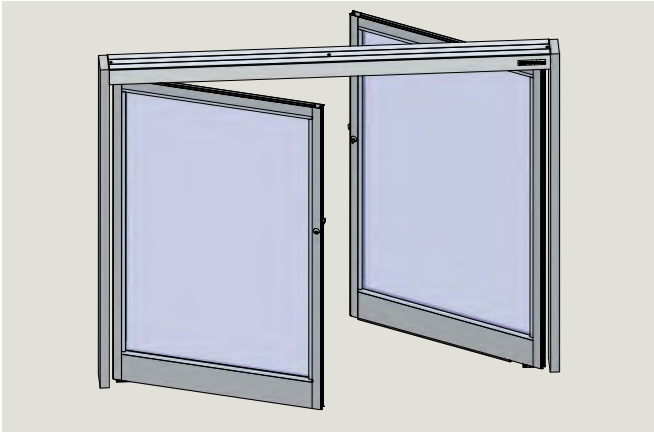

Jambs and doors supplied and installed by customer.
Locks optional.

4 Technical data

4.1 ED50/100/ED250 technical data

4.1.1 Required operating conditions.

Ambient temperature	5 to 122 °F [-15 to 50° C]
Suitable for dry rooms only	Relative air humidity: 93% maximum, non-condensing
Power supply	115 Vac ±10%, 50/60 Hz 6.6 A maximum
Branch circuit protection (provided by others)	15 A maximum, dedicated branch circuit
Protection class	NEMA 1 [IP20]
Power wiring: black, white, bare copper (ground)	12 AWG maximum
Operating noise	Maximum 50 db(A)

4.1.2 General specifications.

Operator dimensions (W x H x D)	27" x 2 3/4 x 5 1/8" [685 x 70 x 130 mm] 27" cover standard
Operator weight	21.8 lb [9.9 kg]
ED50: Power supply for accessories	Separate power supply required.
ED100/ED250: Power supply for accessories	24 Vdc ±5%, 1.5 A.
Maximum door opening angle	95° to 110° depending on installation type

4.1.3 Inputs

Wire size Connector plug screw size		14 AWG 1/16"	
Activation inputs	**X4***	Interior, exterior	N. O. contact
Safety sensors	**X5**	Swing, approach sides.	
Night-bank (intercom system)	**X10** 57, 57a	8-24 Vdc/Vac +5%	
Night-bank (key switch)	**X1** 35, 3	**d2** parameter	Configure for N.O. or N.C. contact
Deactivation of drive function	**X6** 4, 4a	**d1** parameter	Configure for N.O. or N.C. contact

***X4**: terminal board numbers, reference Chapter 7, Terminal board connections.

4.1.4 Outputs

Maximum wire size Connector plug screw size		16 AWG 1/16"	
Door status	**X7** 97,98,99	**Sr** parameter Door closed Door open Door closed, locked	Com, N.O., N.C. contacts

4.1.5 Integrated functions.

Hold open time Automatic opening	**dd** parameter	0 to 30 s Optional 0 - 180 s.
Hold open time NIght / bank	**dn** parameter	0 to 30 s
Hold open time Manual opening	**do** parameter	0 to 30 s
Door blocking behavior	**hd** parameter	Automatic, manual door modes
Electric strike delayed opening for locking mechanism	**Ud** parameter	0 to 4 s
Locking device feedback **X3** 43, 3	Chapter 7	Motor lock
Wind load control, maximum	**Fo, Fc** parameters	33.7 lb f 150 N
Voltage independent braking circuit	Chapter 12	Adjustable with potentiometer
LED status indicators Green, Red, Yellow	Chapter 6	24 Vdc power Error codes Service interval
Mode and Exit Only switches	Chapter 6	Auto, Close, Open Exit only; Off, On
User interface	Chapter 6	4 button keypad, 2 digit display
Slot for upgrade cards	Chapter 20	Extension of functional range.
Firmware update		Firmware update
TMP, temperature management program	Overload protection	
IDC, initial drive control	Driving phase optimization	
Cycle counter	**CC** parameter	0 to 1,000,000
Power assist function	**hA, hF, hS** parameters	Drive support for manual opening of door
Push & go function	**PG** parameter	Auto opening of door at 4° open

4.2 Operating specifications

4.2.1 ED50

Maximum power consumption	120 watts	
Opening force lbf - N **Fo** parameter	Minimum 4.5 [20]	Maximum 13.5 [60]
Manual closing force lbf - N **Fc** parameter	Minimum 4.5 [20]	Maximum 13.5 [60]
Maximum door weight, lb [kg]	220 [100 kg]*	*Based on prevailing conditions at the door opening.
Door width	Minimum 28"	Maximum 48"
Maximum opening speed, °/s	27	May be limited by door weight after learning cycle.
Maximum closing speed, °/s	27	

4.2.2 ED100

Maximum power consumption	120 watts	
Automatic opening torque	Minimum 20 N m 14.8 lbf ft	Maximum FE: 150 N m 110.6 lbf ft LE: 67 N m 49.4 lbf ft
Automatic closing torque	Minimum 20 N m 14.8 lbf ft	Maximum FE: 150 N m 110.6 lbf ft LE: 67 Nm 49.4 lbf ft
Manual closing torque	Minimum 13 N m 9.6 lbf ft	Maximum 37 N m 25 lbf ft
Maximum door weight	220 pounds at a maximum door width of 48 inches.* *Based on prevailing conditions at the door opening.	
Door width	36" to 48"	
Door width for fire protection	36" to 48"	
Maximum opening speed, °/s Note 2	FE: 50 LE: 27	
Maximum closing speed, °/s Note 2	FE: 50 LE: 27	

4.2.3 ED250

Maximum power consumption	240 watts	
Automatic opening torque	Minimum 20 N m 14.8 lbf · ft	Maximum FE: 150 N m 110.6 lbf ft LE: 67 Nm 49.4 lbf ft
Automatic closing torque	Minimum 20 N m 14.8 lbf · ft	Maximum FE: 150 N m 110.6 lbf ft LE: 67 N m 49.4 lbf ft
Manual closing torque	Minimum 6 N m 19.2 lbf ft	Maximum 70 N m 52 lbf ft
Maximum door weight	800 pounds at a maximum door width of 48 inches.* *Based on prevailing conditions at the door opening. Ref: Para. 2.5 for low energy requirements.	
Door width	36" to 48"	
Door width for fire protection	36" to 48"	
Maximum opening speed, °/s Note 2	FE: 60 LE: 27	
Maximum closing speed, °/s Note 2	FE: 60 LE: 27	

Note 1
Full energy / low energy
- FE: ED100/ED250 configured for full energy.
- LE: ED100/ED250 configured for low energy.

Note 2
Depending on door panel weight, automatically limited with low energy power operator doors (ANSI A156.19).
Maximum speeds will only be reached in full energy operating mode, low door panel weight, and a minimum learned opening angle of 95°.

5 Safety information

5.1 Safety instructions.

This document contains important instructions for installation of the ED50/ED100/ED250 overhead concealed swing door operator.
Review these instructions thoroughly prior to installation, and follow them carefully during installation, commissioning, troubleshooting and maintenance.

5.2 Door signage requirements.

Proper signs and labels shall be applied and maintained on the door controlled by the ED50/ED100/ED250 overhead concealed swing door operator as referenced in:

- ANSI/BHMA A156.10: Standard for power operated doors.
- ANSI/BHMA A156.19: Standard for power assist and low energy power operated doors.
- Reference Chapter 9, Door signage.

5.3 Safety warnings.

⚠ WARNING

Damage to equipment or incorrect equipment operation may result from an incorrect installation.

⚠ WARNING

Hazard to mechanical processes by use of control settings, elements, or procedures not documented in this manual!

⚠ WARNING

Electric shock hazard!
By use of control elements, settings, or procedures not documented in this manual!

⚠ WARNING

Work on electrical equipment and 115 Vac wiring installation must be performed only by qualified personnel!

⚠ WARNING

Metallic doors must be grounded per national and local codes!

⚠ WARNING

Hand pinch point and crushing hazards at door closing edges!

⚠ WARNING

Crushing hazards at door closing edges!

5.4 Residual hazards.

⚠ WARNING

After installation, hazards such as minor crushing, impact with limited force, and risk to unsupervised children may exist depending on structural design of door area, type of door, and any safeguards that have been implemented.

Fig. 5.1 Door closing edges

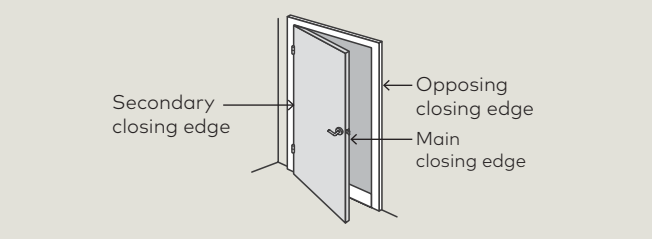

6 ED50/ED100/ED250 User interface

6.1 Overview

Fig. 6.1.1 OHC ED100/ED250 operator

1 4 button keypad and 2 digit display

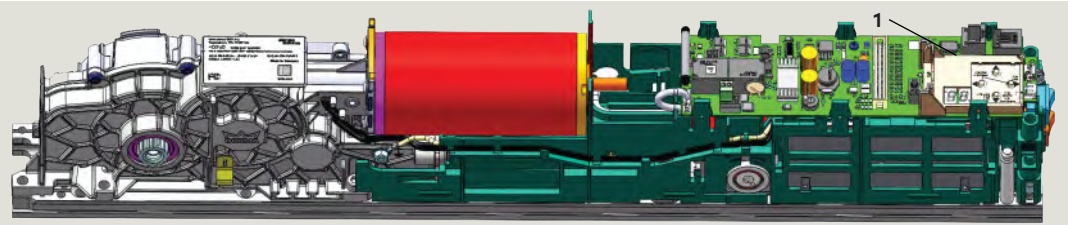

Fig. 6.1.2 OHC ED50 operator

1 4 button keypad and 2 digit display

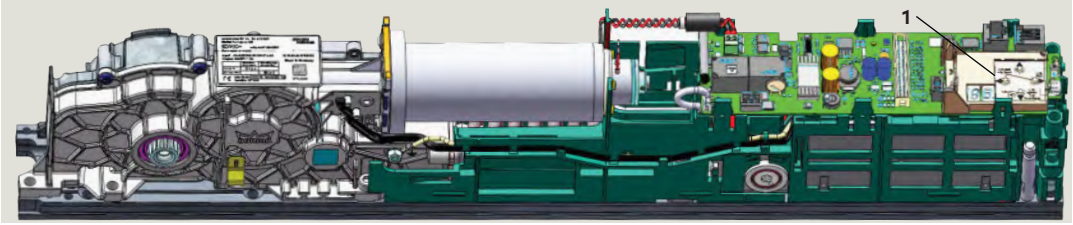

6.2 4 button keypad and display

Fig. 6.2.1 Door hinge side on right

2 2 digit display
5 Button legend

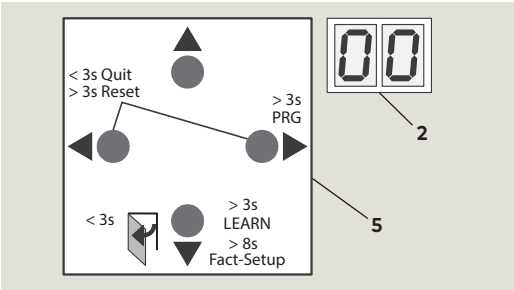

Fig. 6.2.2 Door hinge side on left

2 2 digit display
6 Button legend rotated 180°

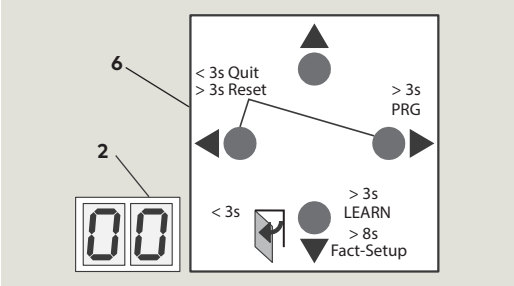

TIPS AND RECOMMENDATIONS

Symbols
- "<", Less than.
- ">", Greater than.

6.2.1 4 button keypad.

4 button legend is orientated so buttons have same function and position regardless of operator orientation. Button legend can be removed and rotated.

6.2.2 4 button keypad functions.

▶	Right button	1. Access parameter menu, press button > 3 seconds. 2. Edit selected parameter. 3. Save changed value.
◀	Left button	1. Reset, > 3s 2. Quit process, < 3 s.
◀▶	Both buttons together	1. Acknowledge errors, press both buttons < 3 s. 2. Reset, press both buttons > 3 s.
▲	Up button	1. Scroll through parameters and error messages. 2. Increase parameter value.
▼	Down button	1. Scroll through parameters and error messages. 2. Reduce parameter value. 3. Opening pulse, press button < 3 s. 4. Learning cycle, press button > 3 s. 5. Reset with factory setting, press button > 8 s (program switch Close position). 6. Identify operator orientation for display

6.3 Operator status LEDs

Fig. 6.3.1 Operator status LEDs, header cover removed

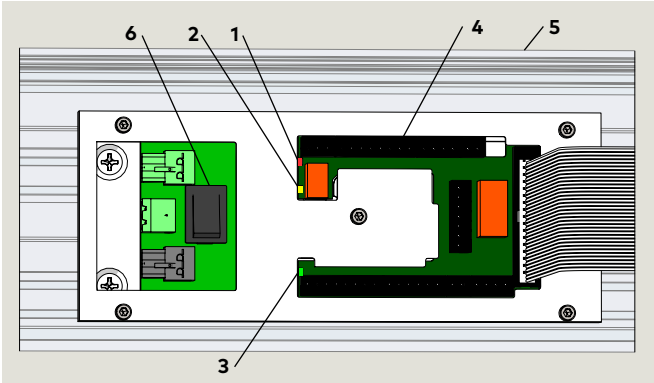

1 Red LED
2 Yellow LED
3 Green LED
4 Accessory terminal board
5 OHC header
6 Power Off/On switch

6.3.1 Operator status LEDs.

1. Red LED
   Blinking codes are used to indicate "In__" information (system status or operating conditions) or certain error codes "E__".
2. Yellow LED
   Maintenance interval indicator. When illuminated, an indication the operator system has to be serviced.
3. Green LED

- On, internal 24 Vdc power is On.
- Off, internal 24 Vdc power is Off.

TIPS AND RECOMMENDATIONS

Details on LED status codes and maintenance intervals can be found in Appendix B – Troubleshooting.

6.4 Mode switch and Exit Only switch panel

Fig. 6.4.1 Overhead concealed header

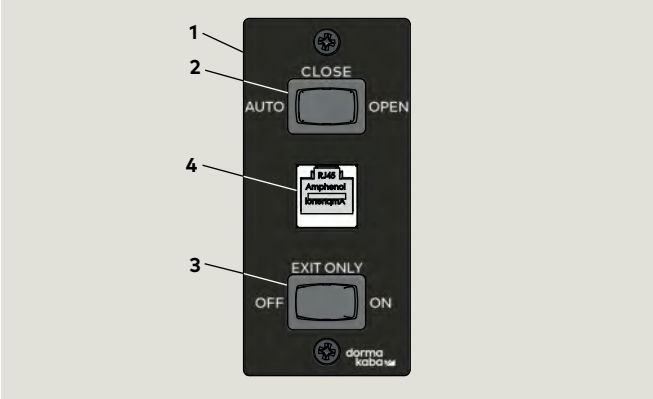

1 Mode switch panel
2 Mode switch, three position
3 Exit only switch, two position
4 RJ45 Comm port for service

6.4.1 Mode switch positions.

Fig. 6.4.2 Auto

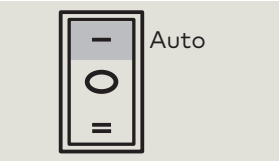

Fig. 6.4.3 Close

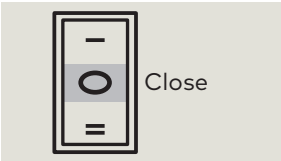

Fig. 6.4.4 Open

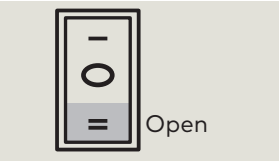

6.4.2 Exit Only switch positions.

Fig. 6.4.5 On

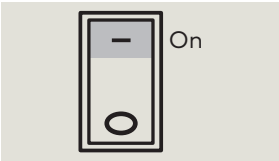

Fig. 6.4.6 Off

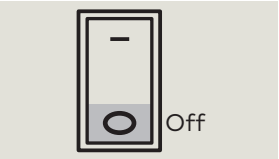

Fig. 6.4.7 Optional key switch panels

6.4.3 Mode switch position descriptions.

Auto

1. Door opens automatically when one of the activators is actuated or triggered.
   Door closes on expiration of adjustable hold open time with no activators or actuators triggered.
2. With knowing act device actuation (Para. 4.2.3).
   Door will remain at full open position for not less than 5 seconds.
3. With push/pull actuation of door (Para. 7.2).
   Door will remain at full open position for not less than 3 seconds.

Close

1. Door will remain closed, or if door is open door will close.

Open

1. Door opens automatically and remains open.

6.4.4 Exit Only switch position descriptions.

On

1. Exterior activation sensor or knowing act device disabled when door fully closed.

- Only interior activation sensor or knowing act device will enable door opening.

Off

1. Both interior and exterior activation sensors or knowing act devices will enable door opening.

6.5 ED50/ED100/ED250 automatic and manual modes

6.5.1 Automatic mode.

Manual/automatic mode parameter **hd**=0.
Setting if door is opened automatically following pulse generation by an activation or knowing act device.

6.5.2 Manual mode.

Manual/automatic mode parameter **hd**=1.
Setting if door is opened manually most of the time and only rarely automatically.

6.5.3 Power assist.

- Available only in manual mode (**hd**=1). Drive support is automatically adjusted to operator size.
- Parameter **hA** sets door activation angle for power assist function. Once angle reached, drive support provides easier manual opening of the door.
- Parameter **hF,** power assist function. Parameter decreases the amount of force required to open the door.
- Parameter **hS**, power assist function support for door in closed position.

TIPS AND RECOMMENDATIONS

Parameter descriptions can be found in Chapter 11; Parameters.

6.6 Low and full energy doors

6.6.1 Low energy power operated door (ANSI/BHMA A156.19).

1. ED50 is supplied only as a low energy operator.
2. ED100 and ED250 operator default is low energy. **F2** parameter = 0.

- Reference ANSI/BHMA A156.19, Standard for Power Assist and Low Energy Power Operated Swinging Doors.

6.6.1.1 Low energy power operated door definition.

A door with a power mechanism that opens the door upon receipt of a knowing act activating signal, does not generate more kinetic energy than specified in ANSI 156.19, and is closed by a power mechanism or by other means.

Required system safety, as a low energy application, is achieved utilizing the following design factors:

- Reduced dynamic door panel contact forces.
- Reduced static door panel contact forces.
- Low driving speeds.
- Force limitation.

6.6.1.2 Knowing act definition.

Any conscious action with the expected result of opening a door. This includes but is not limited to:

- Wall or jamb mounted contact or non contact switches such as pushplates.
- The action of of manually opening (pushing or pulling) a door.
- Controlled access devices such as keypads, card readers, wireless transmitters and key switches.

6.6.2 Power operated door (ANSI/BHMA A156.10).

ED100 and ED250 operators can be configured for full energy (power operated door).
F2 parameter = 2.

6.6.2.1 Power operated door definition.

The combination of door, operator, controls and sensors constituting the system. (Also called automatic door.)

7 System accessories

7.1 System accessory electrical connections

Fig. 7.1.1 Electrical connections, single door

1 External mode switch, mechanical
2 External mode switch, electronic
3 Key switch
4 Pushbutton, night / bank
5 Pushbutton, interior
6 Pushbutton, exterior
7 Door locking device
8 Manual release switch
9 ED50/ED100/ED250

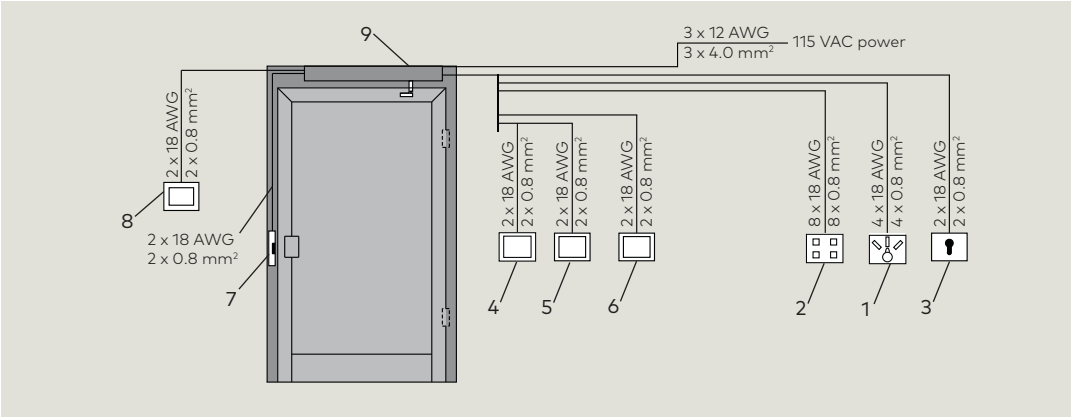

7.2 System accessories

7.2.1 Overview

ED50/ED100/ED250 operators are normally used with system accessories available from dormakaba USA, Inc. or other manufacturers.

7.2.2 Accessory electrical installation.

Electrical interfaces from system accessories used with operator must be planned for. This includes routing of wiring from accessories to operator.

7.2.3 System accessories, other manufacturers.

dormakaba USA cannot guarantee compatibility for other manufacturer's accessories. If any of these accessories are used despite this caution, the operator's full range of functions may be unavailable, or the accessories may not function properly.

WARNING

Damage to operator or to connected device is also possible!

7.2.4 ED50 power for accessories.

1. Separate power supply required for accessories.

7.2.5 ED100/ED250 power for accessories.

1. 24 Vdc, 1.5 A (36 watts) is available from the operator for external consumers (Fig. 8.1.1). This supply has overcurrent protection. If additional power is required, an external power supply must be used.

7.2.6 Activators

Typical activators:

1. Pushbuttons, key switches
2. Access control systems
3. Telephone systems
4. Intercoms
5. Sensor automatic activators (ANSI/BHMA A156.10).

TIPS AND RECOMMENDATIONS

Refer to Chapter 4, Technical data for electrical interface requirements.

7.2.7 Locking devices.

Typical locking devices:

1. Electric strike plates
2. Electromagnetic locks
3. Electric locks

To ensure that operator and locking device work safely when connected together, locking device must comply with following:

1. Operating voltage, power supply from operator, 24 Vdc, ±5 %.
2. Operating voltage, external power supply, 48 Vdc/Vac maximum.
3. Locking device relay contact, maximum load, 1 A.
4. Electric strike plate duty factor, 30% minimum.
5. Motor lock duty factor, 100%.

8 Terminal board connections

1 Green LED (Para. 4.4)
2 Yellow LED (Para. 4.4)
3 Red LED (Para. 4.4)
4 Key (red insert) location in socket. Assigned plug has tab in same location broken off.
5 Jumpers, factory installed at following terminals:
- 4 and 4a
- 15 and 3*
- 11 and 3*

6 DCW upgrade card plug
7 Fire protection upgrade card plug

Fig. 8.1.1 ED50/ED100/ED250 terminal board electrical connections

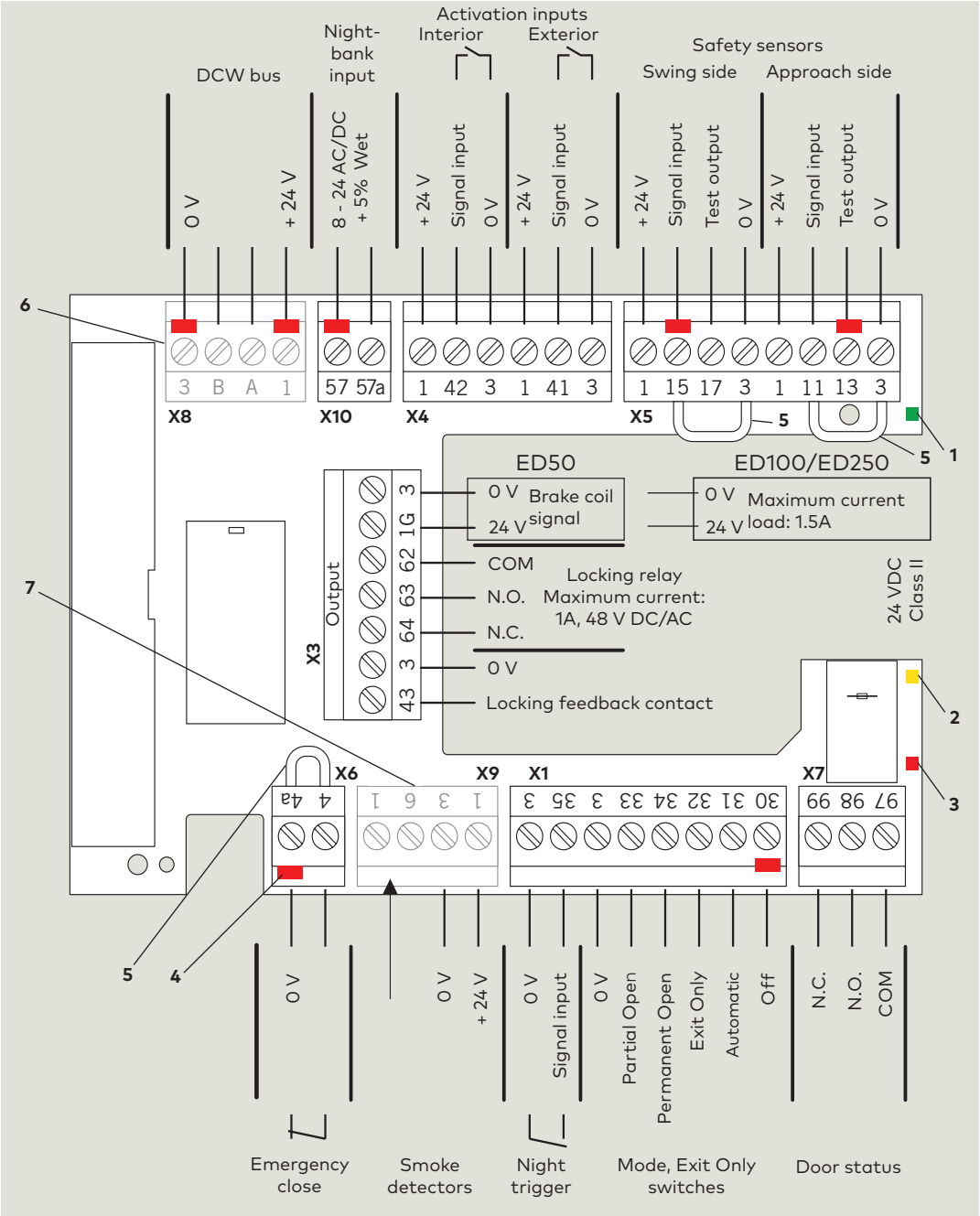

TIPS AND RECOMMENDATIONS

- Use documentation provided with each device for electrical installation.
- It is recommended not to connect system accessories to board until after operator has been setup and learning cycle performed (Chapter 12).

Note 1: ED100/ED250: Terminals 3 and 43 are also used for swing side overhead sensor input when parameter ST is set to 7 or 8.
Reference Appendix A, Parameters.

9 ED50/ED100/ED250 door signage

9.1 Full energy operator

9.1.1 Overview

Signage and warnings are specified in
ANSI /BHMA A156.10, American National Standard for Power Operated Pedestrian Doors, paragraph 11.

9.1.2 Door, one way traffic, Fig. 9.1.1.

1. Arrow and AUTOMATIC DOOR, one side of decal.
- Shall be visible from approach side of a swinging door, mounted on door at a height of 50" ±12" from floor to centerline of sign.
2. DO NOT ENTER and AUTOMATIC DOOR, one side of decal (or separate decal for solid doors - DD0739-020).
- Shall be visible from non-approach side of door that swings towards pedestrians attempting to travel in wrong direction.

9.1.3 Door, two way traffic, Fig. 9.1.2.

1. Arrow and AUTOMATIC DOOR, one side of decal.
- Shall be visible from approach side of a swinging door, mounted on door at a height of 50" ± 12" from floor to centerline of sign.
2. CAUTION AUTOMATIC DOOR, one side of decal.
- Swinging doors serving both egress and ingress shall have a "CAUTION AUTOMATIC DOOR" sign visible from swing side of door.
- Sign shall be mounted on door at a height of 50 ± 12" from floor to centerline of sign.

Fig. 9.1.1 One decal, approach side, non-approach side

Fig. 9.1.2 One decal, two way traffic

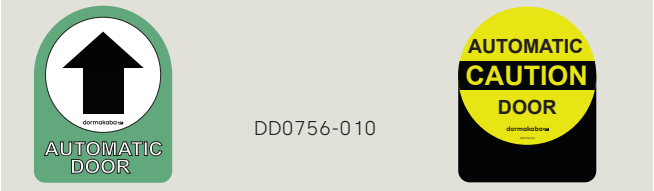

Fig. 9.1.3 ACTIVATE SWITCH TO OPERATE decal

9.1.4 Knowing act door.

1. ACTIVATE SWITCH TO OPERATE decal.
- Knowing act doors shall have signage stating "ACTIVATE SWITCH TO OPERATE" on side of door having knowing act switch or other knowing act device.

9.2 Low energy operator

9.2.1 Overview

Signage and warnings are specified in
ANSI /BHMA A156.19, American National Standard for Power Assist and Low Energy Power Operated Doors.

9.2.2 All low energy doors.

1. AUTOMATIC CAUTION DOOR decal.
- All low energy doors shall be marked with signage visible from both side of door with the words "AUTOMATIC CAUTION DOOR".
- Signs shall be mounted 50" ± 12" from floor to centerline of sign.

9.2.3 Knowing act switch used to initiate door operation.

1. ACTIVATE SWITCH TO OPERATE decal.
- When a knowing act device is used to initiate operation of door operator, door shall be provided with sign on each side of door where switch is operated with message "ACTIVATE SWITCH TO OPERATE".

9.2.4 Push/Pull used to initiate door operation.

1. PUSH TO OPERATE, PULL TO OPERATE decals.
- When push/pull is used to initiate operation of door operator, doors shall be provided with the message "PUSH TO OPERATE" on push side of door and "PULL TO OPERATE" on pull side of door.

Fig. 9.2.1 AUTOMATIC CAUTION DOOR decal

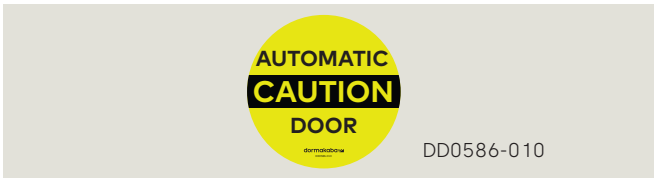

Fig. 9.2.2 ACTIVATE SWITCH TO OPERATE decal

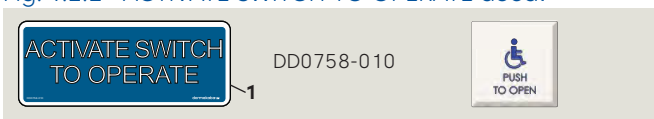

1 Activate Switch to Operate DD0758-010

Fig. 9.2.3 PUSH TO OPERATE, PULL TO OPERATE decals

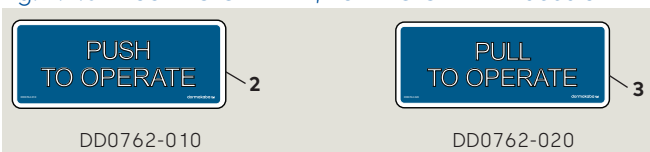

2 Push to Operate DD0762-010

3 Pull to Operate DD0762-020

9.3 Door signage, full energy single swing doors (ANSI/BHMA A156.10)

Fig. 9.3.1 One decal, one way traffic

Approach Swing side

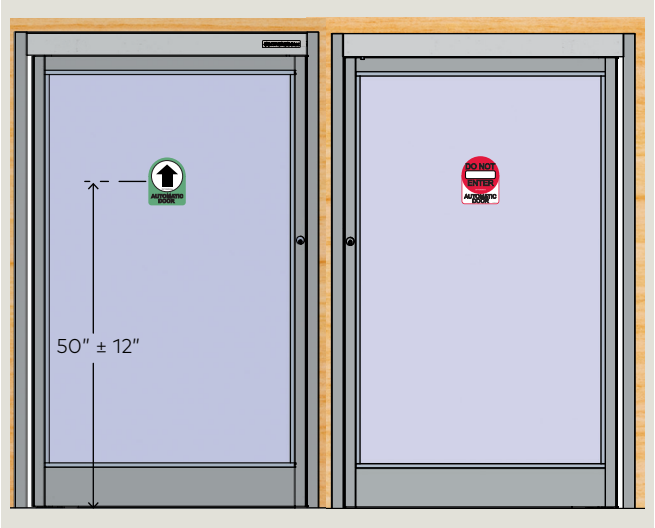

Fig. 9.3.3 One decal, two way traffic

Approach Swing side

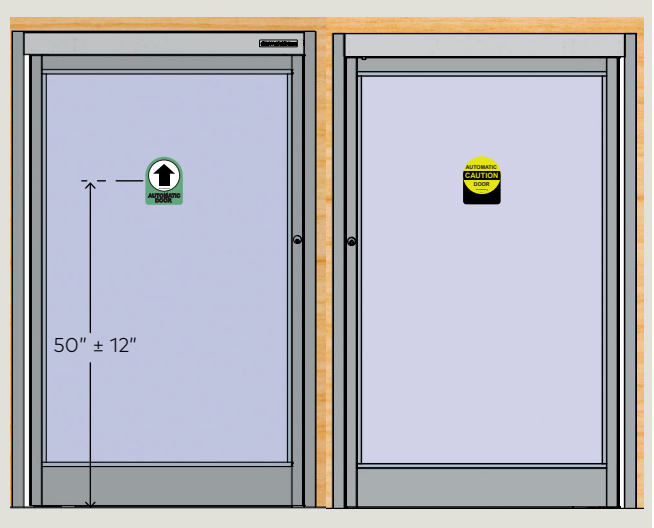

Fig. 9.3.2 One way traffic

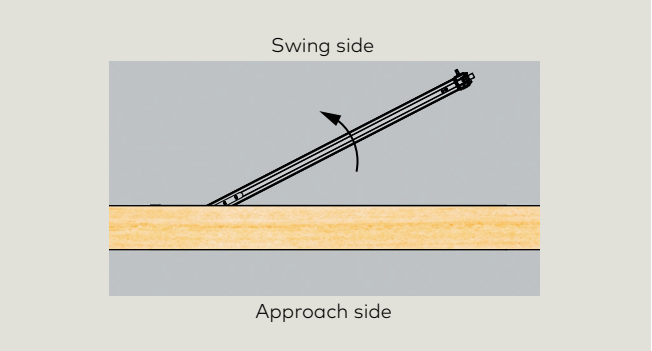

Fig. 9.3.4 Two way traffic

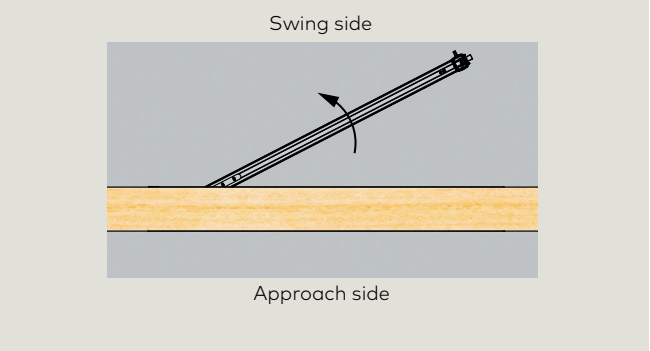

9.4 Door signage, low energy single swing doors (ANSI/BHMA A156.19)

Fig. 9.4.1 Knowing act device

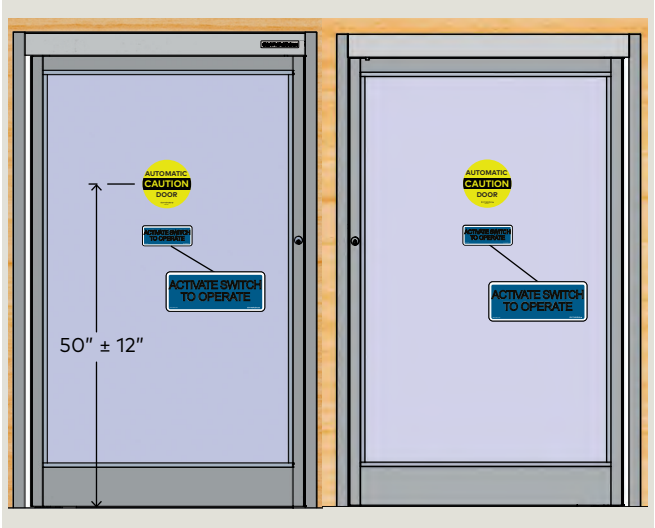

Fig. 9.4.2 Push/pull

Pull to Operate Push to Operate

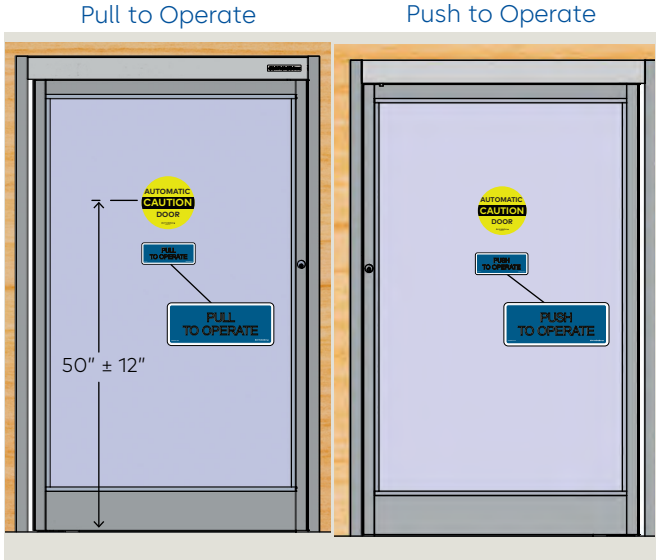

9.5 Door signage, full energy pair swing doors (ANSI/BHMA A156.10)

Fig. 9.5.1 One way traffic, approach side

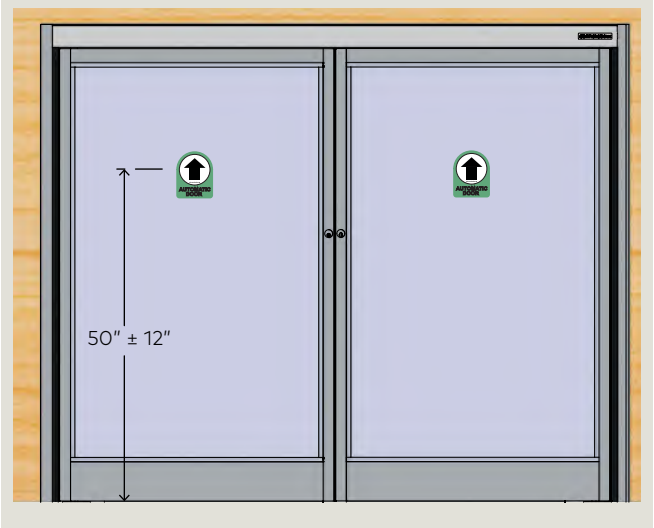

Fig. 9.5.2 Two way traffic, approach side

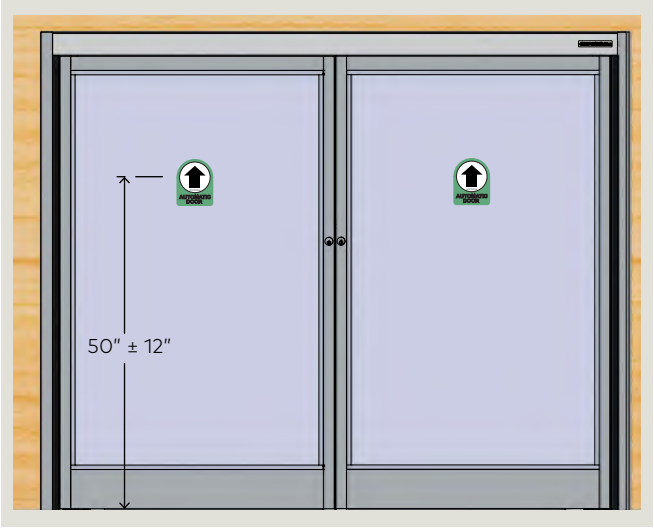

Fig. 9.5.3 Knowing act, approach side, one way

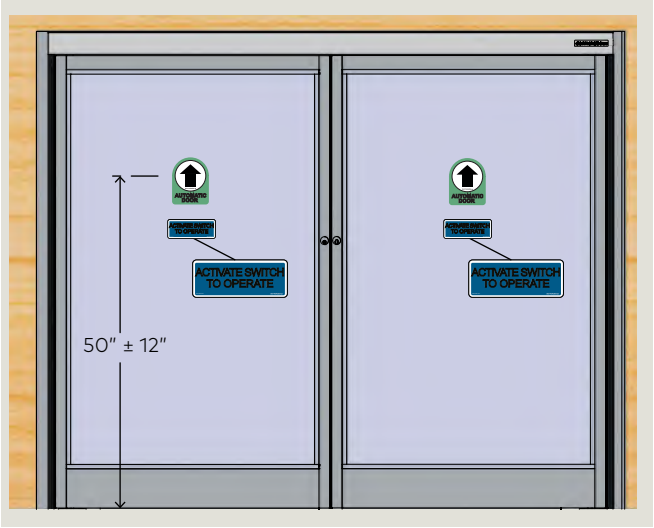

Fig. 9.5.4 One way traffic, swing side

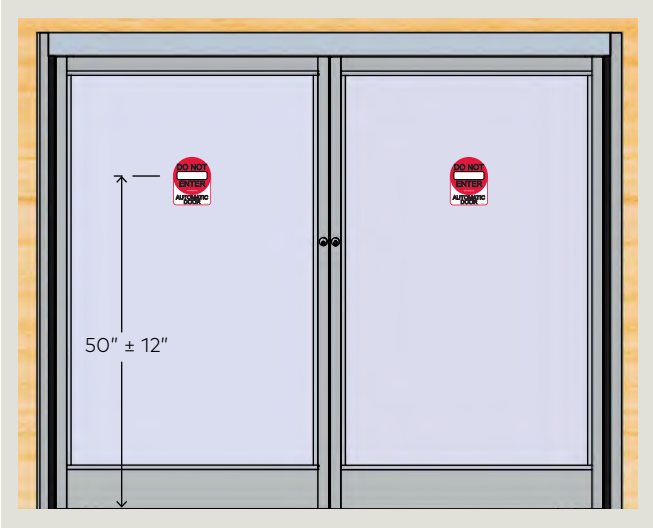

Fig. 9.5.5 Two way traffic, swing side

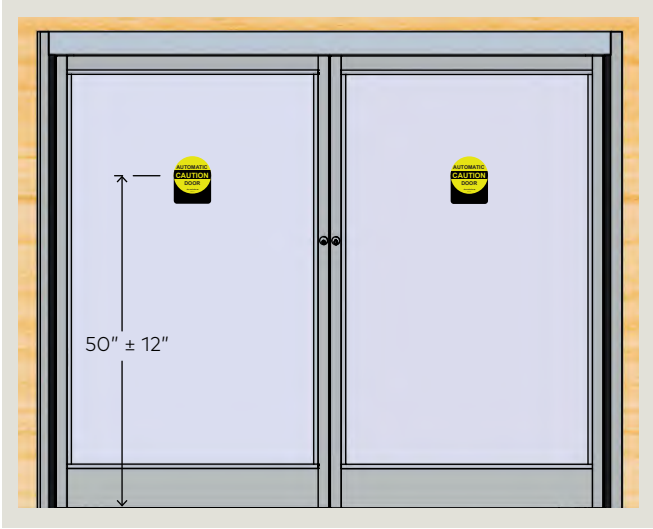

Fig. 9.5.6 Knowing act, swing side, one way

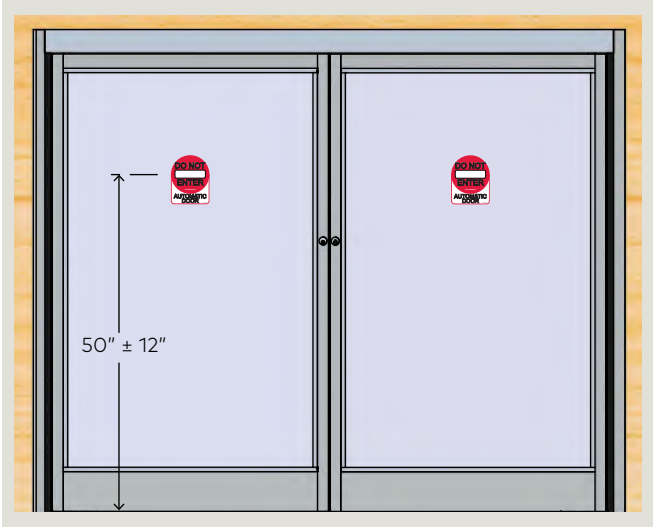

9.6 Door signage, low energy pair swing doors (ANSI/BHMA A156.19)

Fig. 9.6.1 Knowing act device, approach side

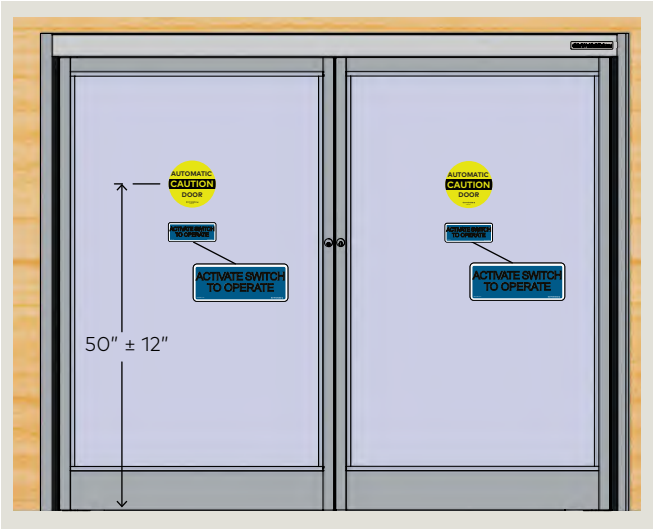

Fig. 9.6.3 Knowing act device, swing side

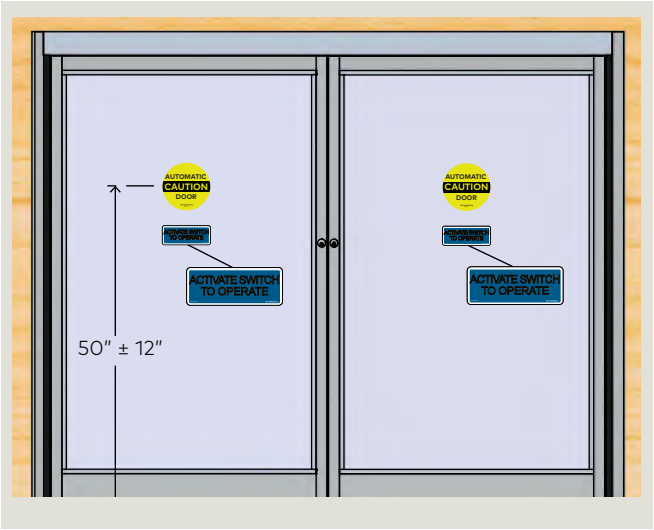

Fig. 9.6.2 Push/pull, door push, approach side

Push to Operate

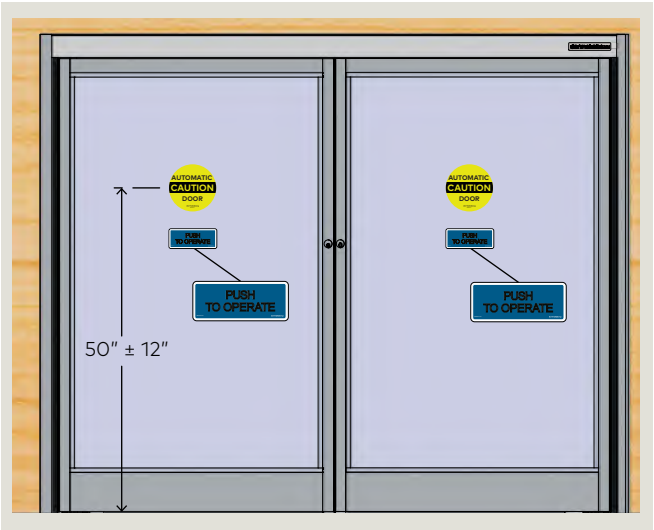

Fig. 9.6.4 Push/pull, door pull, swing side

Pull to Operate

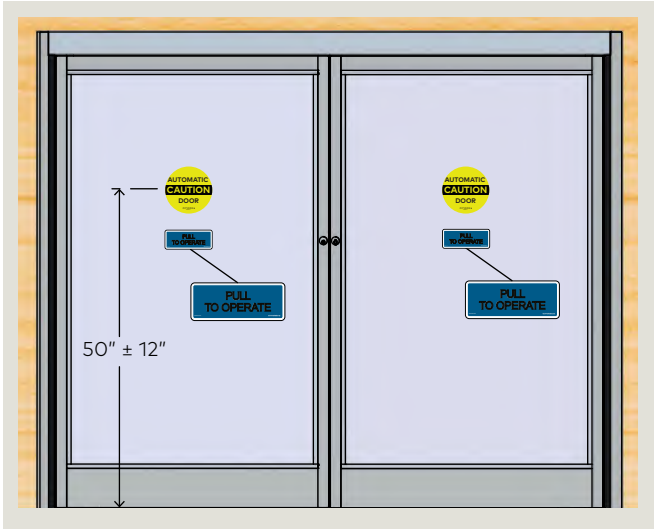

9.7 Door signage, full energy double egress swing doors (ANSI/BHMA A156.19)

Fig. 9.7.1 OHC RH double egress

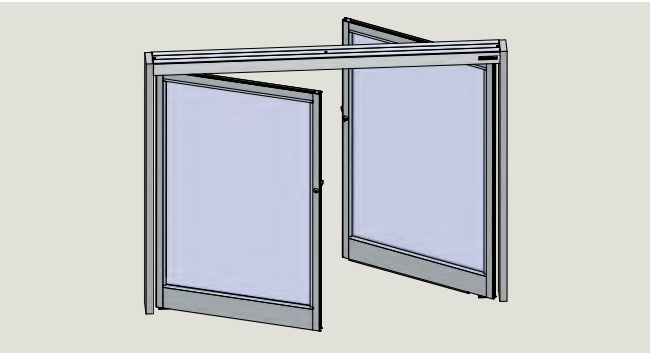

Swing side Approach side

Fig. 9.7.2 RH double egress

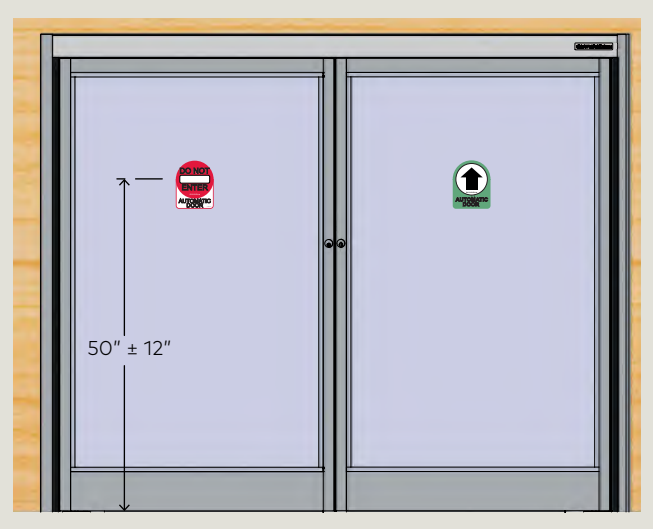

Swing side Approach side

Fig. 9.7.3 RH double egress, exterior side

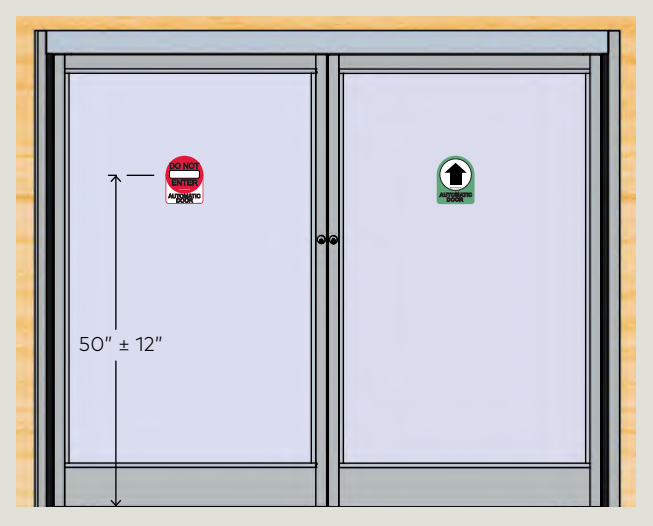

Swing side Approach side

Fig. 9.7.4 OHC LH double egress

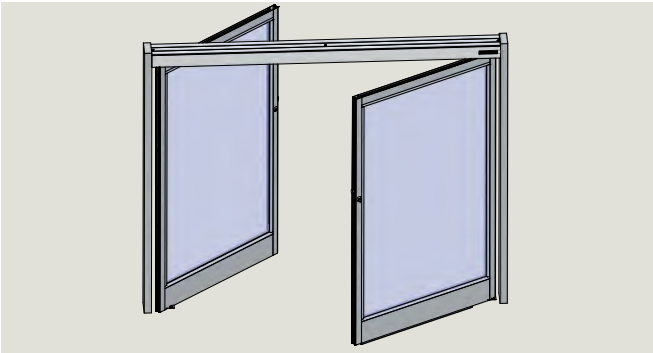

Approach side Swing side

Fig. 9.7.5 LH double egress

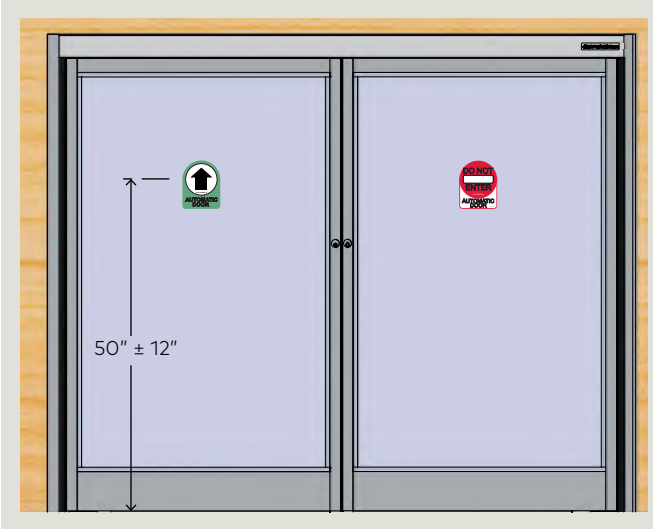

Approach side Swing side

Fig. 9.7.6 LH double egress, exterior side

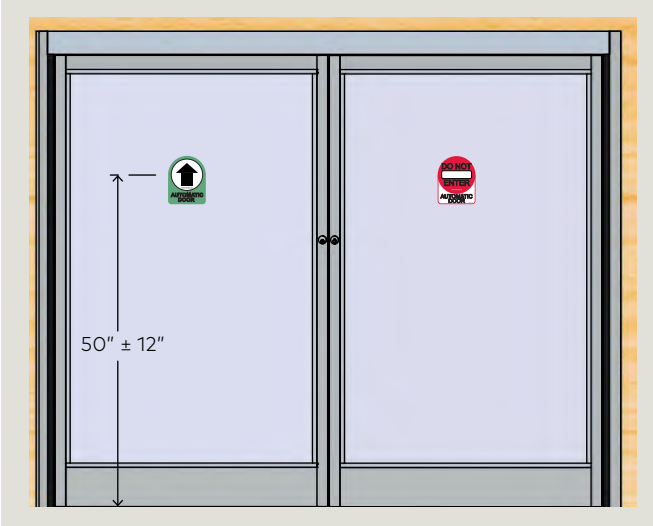

Approach side Swing side

9.8 Safety label, automatic swing doors

9.8.1 Automatic swinging door safety information label

This AAADM label outlines safety checks that should be performed daily on automatic swinging door controlled by an ED100 or ED250 operator configured for full energy mode.

9.8.2 Safety information label location

Place label in a protected, visible location on door frame, near program switch panel if possible.

9.8.3 Annual compliance section of label

This section of label is only completed on automatic swing doors that comply with ANSI/BHMA A156.10 standard and pass inspection by an AAADM certified dormakaba USA, Inc. technician.

9.8.4 Additional annual compliance inspection labels

Place additional labels over annual compliance inspection section of safety information label.

9.9 Safety label, low energy swing doors

9.9.1 Low energy swinging door safety information label

This AAADM label outlines safety checks that should be performed daily on low energy swinging door controlled by an ED50 operator or an ED100/ED250 operator configured for the low energy mode.

9.9.2 Safety information label location

Place label in a protected, visible location on door frame, near program switch panel if possible.

9.9.3 Annual compliance section of label

This section of label is only completed on low energy swing doors that comply with ANSI/BHMA A156.19 standard and pass inspection by an AAADM certified dormakaba USA, Inc. technician.

9.9.4 Additional annual compliance inspection labels

Place additional labels over annual compliance inspection section of safety information label.

Fig. 9.8.2 Annual compliance inspection labels

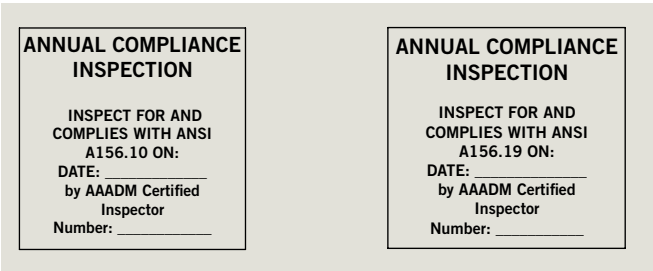

Fig. 9.8.1 Safety information labels

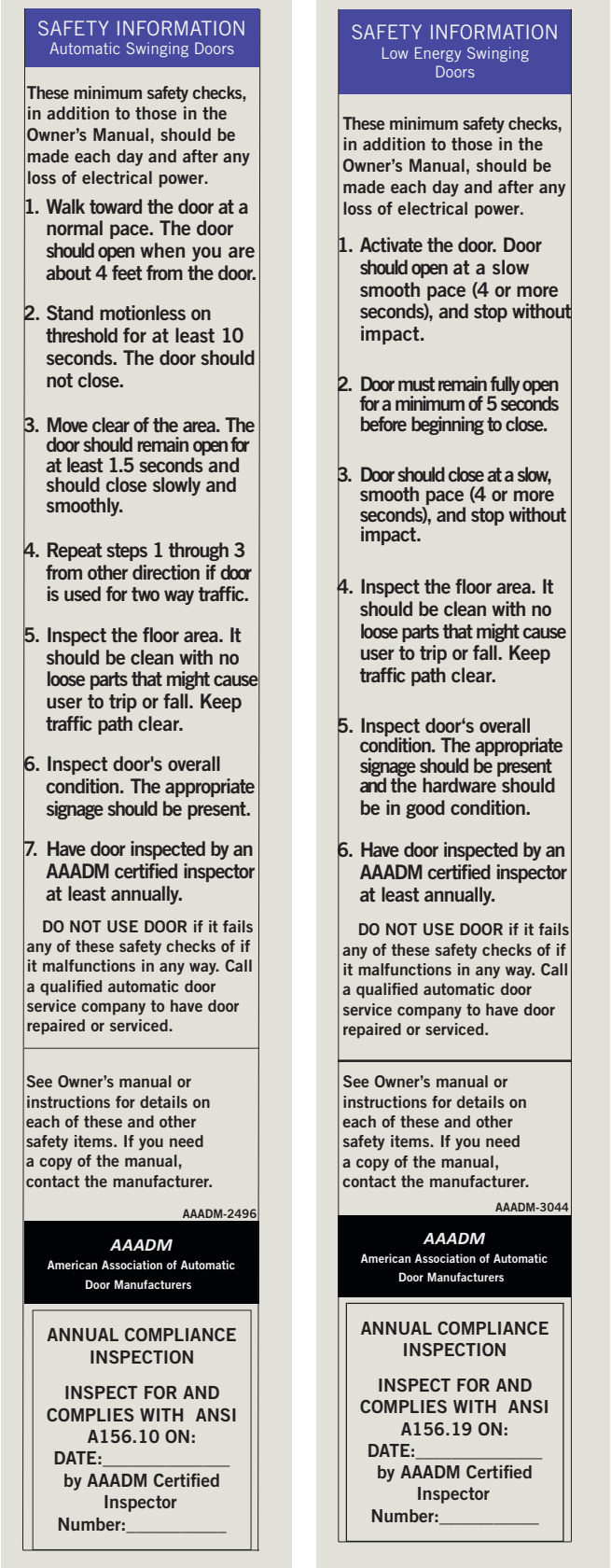

10 Parameters

10.1 ED50/ED100/ED250 OHC – viewing and changing parameters

10.1.1 Changing parameter values.

1. Set Mode switch to the CLOSE position.

Fig. 10.1.1 Mode switch

2.. Use 4 button keypad as outlined in Steps 1 through 8 to view or change parameter values.

Fig. 10.1.2 4 button keypad, 2 digit display

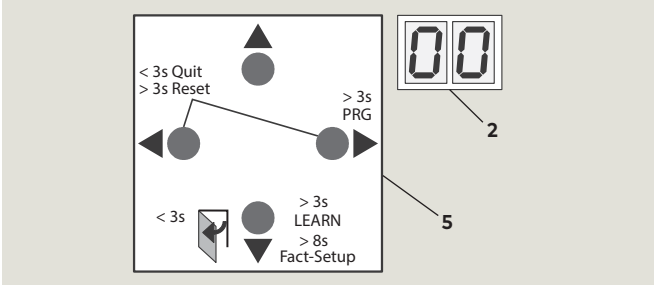

2 2 digit display
5 4 button keypad

Step 1 ▶	Press right button greater than 3 s to enter program mode.
Step 2 ▲▼	Press up or down button to scroll through parameters until desired parameter is displayed.
Step 3 ▶	Press right button to display current parameter value.
Step 4 ▶	Press right button again to enable editing of value, display will start flashing.
Step 4 ▲▼	Press up or down button to select desired parameter value.
Step 5 ▶	Press right button to save selected value. Display stops flashing.
Step 6 ◀	Press left button to return to selected parameter.
Step 7 ▲▼	Press up or down button to scroll through parameters until next desired parameter is displayed.
Step 8 ◀	Press left button for a minimum of 3 s to exit program mode.

10.2 Configuration parameters

10.2.1 Configuration parameters.

Configuration parameters (Table 9.2.1) are set during operator initial setup. Reference Chapter 10.

Table 10.2.1 Configuration parameters

Parameter			Description
1	AS	AS	Installation type
2	rd	rd	Reveal depth
3	Tb	Tb	Door width
4	dL	dL	Door type

10.3 Driving parameters

10.3.1 Driving parameters.

Driving parameters (Table 10.3.1) can be set once initial setup (Chapter 10) has been completed.

- Reference Appendix A for driving parameter detail.

Table 10.3.1 Driving parameters

Driving parameter			Description
5	So	So	Opening speed, automatic mode
6	Sc	Sc	Closing speed, automatic mode
7	dd	dd	Hold open time, automatic mode
8	dn	dn	Hold open time, night/bank
9	do	do	Hold open time, manual opening of door
10	Sb	Sb	Wall masking on door swing (hinge) side
11	ST	Sr	Safety sensor test
12	SA	SA	Activation by safety sensor on approach (opposite hinge) side
13	SP	SP	Suppression of safety sensor on swing hinge) side during initial movement
14	Ud	Ud	Locking mechanism delayed opening time
15	Pu	Pu	Door preload prior to unlocking
16	TS	rS	PR (Power reserve) module test
17	Fo	Fo	Static force on door closing edge in opening direction (wind load control)
18	Fc	Fc	Static force on door closing edge in closing direction (wind load control)
19	EP	EP	Motor driven latching action, automatic mode
20	EA	EA	Door opening angle at which motor driven latching action is activated
21	FH	FH	Locking force
22	PG	PG	Push and Go
23	PS	PS	Mode (program) switch type
24	S1	S1	DCW EPS, electronic program switch behavior following a power reset
25	S2	S2	Internal program switch; switch function on delay
26	du	du	Door unlocking during business hours
27	Sr	Sr	Status relay function, terminal block X7
28	bE	bE	Input 4/4a and X3, 1G 24V locking device output configuration

NOTICE

Parameter details – Reference Appendix A.

Driving parameter			Description
29	CC	CC	Cycle counter, number displayed * 10000
30	EC	EC	Delete error log
31	CS	CS	Reset service interval display (yellow LED)
32	SL	SL	Factory setting level (Fact Setup button)
33	OA	OA	Opening angle, set during learning cycle
34	hd	hd	Door closer mode, automatic or manual
35	hA	hA	Power assist function activation angle
36	hF	hF	Power assist function force adjustment
37	hS	hS	Power assist function support for manual mode in door closed position
38	F1	F1	Upgrade card, fire protection
39	F2	F2	**ED50: not used.** F2=0 (default): Low energy: ANSI/BHMA A156.19 F2=2: Full energy: ANSI/BHMA A156.10
40	F3	F3	Not used
41	F4	F4	Not used
42	F5	F5	Not used
43	F7	F7	Upgrade card, barrier free toilet
44	F8	F8	Upgrade card, DCW I/O module
45	C1	C1	Configuration of COM 1 interface
46	bc	bc	Back check angle when door opened manually
47	Td	rd	Door thickness (mm)
48	d1	d1	Deactivation of drive, emergency pushbutton at X4, 4 and 4a, trigger type
49	d2	d2	Night/bank function, trigger type
50	FC	FC	Hold open system release by manually closing door, trigger type
51	Ad	Ad	Active door with astragal, caster angle; angle door must reach before passive door starts to open
52	HS	HS	Hinge clearance

11 System setup for single door installation

11.1 Set operator spring tension

11.1.1 Operator spring tension function.

1. Spring tension sets closing force on door.
2. Required spring tension is based on door width.

11.1.2 Operator spring tension access.

1. Operator Spring tension adjustment is accessed through hole in bottom of header.

11.1.3 Spring tension adjustment factory setting.

1. Spring tension adjustment is factory set fully CCW, no spring tension.

CAUTION

A minimum of ten spring tension revolutions are required to operate system.

11.1.4 Set operator spring tension.

1. Set operator spring tension revolutions based on operator type and door width outlined in Table 11.1.1.

Table 11.1.1 Operator spring tension setting revolutions

Door width			
Inches	36	42	48
mm	914	1067	1219
Spring setting revolutions			
ED50	10	14	18
ED100	10	14	18
ED250	10	14	18

NOTICE

Final spring tension setting based on door width and weight.

Fig. 11.1.1 Spring tension adjustment example

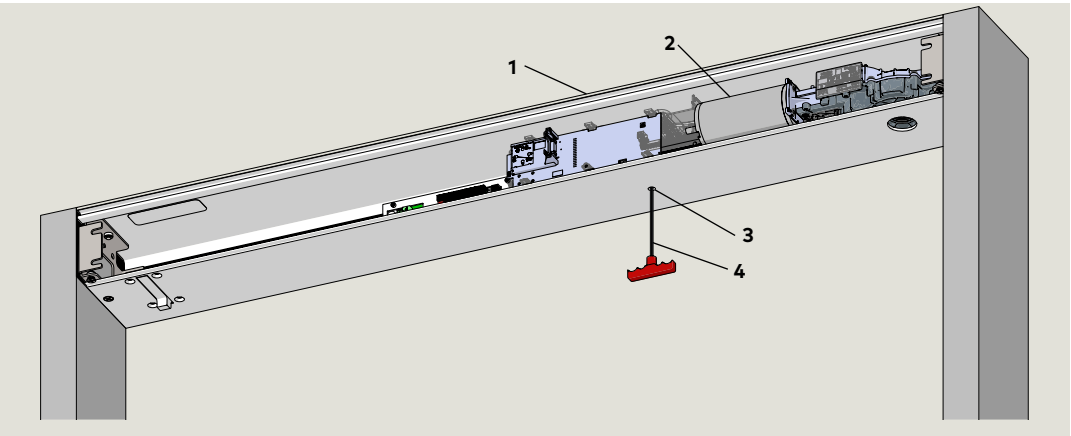

1 OHC header
2 ED50/ED100/ED250 operator
3 Header access hole, spring tension adjustment
4 T handle hex key, 5 mm

11.2 Set braking circuit plug position

Fig. 11.2.1 ED operator control board

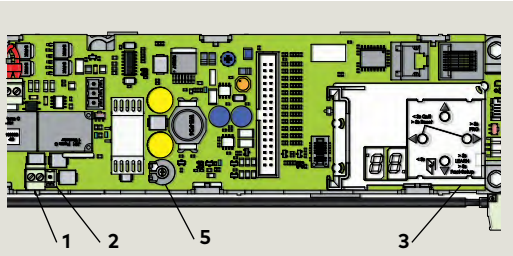

1 Braking circuit plug
2 Braking circuit 3 pin socket
3 User interface
5 Power fail closing speed potentiometer

Fig. 11.2.2 Plug position, outswing

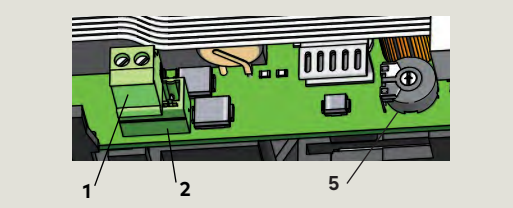

1 Braking circuit plug
2 Braking circuit 3 pin socket
5 Power fail closing speed potentiometer

Fig. 11.2.3 Plug position, inswing

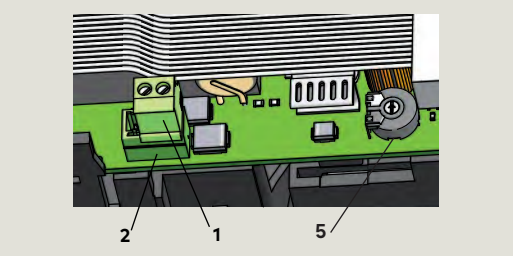

1 Braking circuit plug
2 Braking circuit 3 pin socket
5 Power fail closing speed potentiometer

Fig. 11.2.4 115 Vac power switch

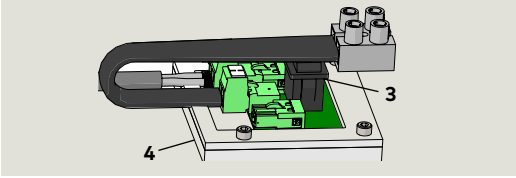

3 Power switch
4 115 Vac module

11.2.1 Set braking circuit plug position.

- Operator braking circuit plug is positioned in its 3 pin socket for an outswing or inswing installation.

WARNING

Braking circuit will not work correctly if braking circuit plug is improperly positioned, or if an incorrect plug is used!
Door may close at high speed and/or be difficult to open!

11.2.2 Braking circuit plug outswing position.

- Braking circuit plug is factory installed in the two pins away from user interface, the outswing position (Fig. 11.2.2).

11.2.3 Changing braking circuit plug position to inswing position.

1. To change plug position to inswing installation, install plug in right two pins, toward user interface (Fig. 11.2.3).

WARNING

Power switch (Fig. 11.2.4) must be OFF before changing plug position!

11.2.4 Door configurations.

Fig. 11.2.5 LH outswing

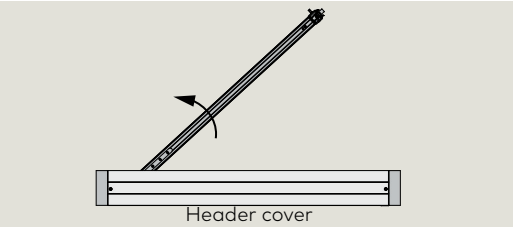

Fig. 11.2.6 RH outswing

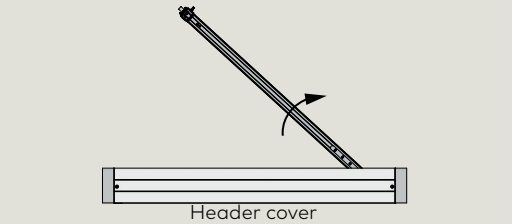

Fig. 11.2.7 LH inswing

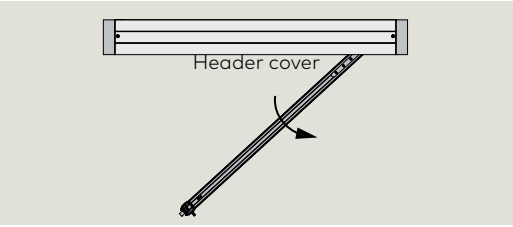

Fig. 11.2.8 RH inswing

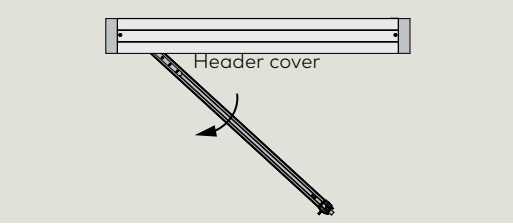

11.3 ED50/ED100/ED250 OHC power on

Fig. 11.3.1 Mode switch,

Fig. 11.3.2 115 Vac power module

3 Power switch
4 115 Vac power module

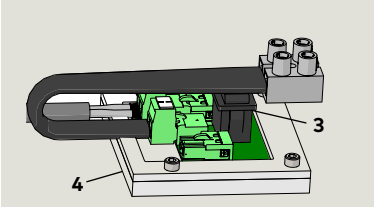

Fig. 11.3.3 4 button keypad, 2 digit display

3 Four button keypad
4 Two digit display

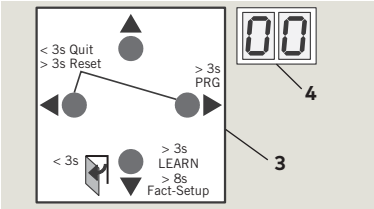

Fig. 11.3.4 2 digit displays on power up

Two digit displays
5 System check
6 Self check
7 Horizontal dashes up and down

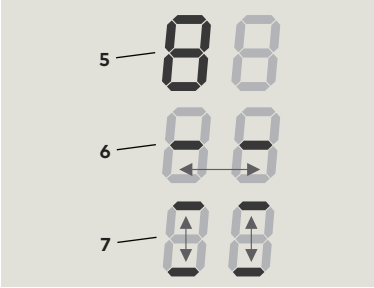

Fig. 11.3.5 Device ID, firmware version display

8 Device ID, firmware version display

Fig. 11.3.6 Program mode

9 Program mode display

11.3.1 Conditions prior to power on.

1. 115 Vac branch circuit to operator is energized.
2. Operator motor is cold.

CAUTION

Motor must be cold for learning cycle!

11.3.2 Mode switch to CLOSE position.

1. Set Mode switch to CLOSE position

11.3.3 Power switch to ON position.

1. Set power switch to ON position.

11.3.4 System checks (Fig. 11.3.4).

- System check, series of letters and numbers rapidly displayed (**5**).
- Control unit self check, two segments jumping back and forth (**6**).
- Horizontal dashes move up and down (**7**).

11.3.5 4 button keypad down button

1. Press four button keypad down button:
- While 2 digit display segments move up and down (**7**), letters and numbers will change if required to display correct orientation.

2. Display scrolls (**8**):
- Device ID (Ed 250 as example)
- Firmware version (format F x x x x)

3. Program mode display.
- Program mode (**9**) will be displayed indicating system requires further parameter settings.

TIPS AND RECOMMENDATIONS

If pressing down button (Para. 11.3.3) does not result in desired display orientation, return to Para. 11.3.3, turn power button off, then back on to repeat steps.

11.4 Set installation type parameter **AS**

Table 11.4.1 AS parameter values

AS	**Installation type**
Parameter value	Parameter description
0*	Pull arm with track, wall mounting on swing (hinge) side.
1	Push arm, wall mounting on approach (opposite hinge) side.
2	Push arm with track, wall mounting on approach (opposite hinge) side.
3	Overhead concealed (OHC) RH
4	Overhead concealed (OHC) LH
5	**ED250 only**: ANSI 6 door width: ≥ 55"

AS factory setting = 0.

11.4.1 Set AS OHC parameter value.

Step 1 Press ▶	AS	Press **PRG** greater than 3 s to enter program mode, **AS** parameter displayed.
Step 2 Press ▶	00	Displays "00" , factory setting.
Step 3 Press ▶	00	"00" starts flashing.
Step 4 Press ▲▼	04	Scroll to "4" (OHC LH as example).
Step 5 Press ▶	04	Saves "4" value for Push. Display stops flashing.
Step 6 Press ◀	AS	Returns to Installation type parameter.
Step 7		**Go to Para. 11.5, set door width parameter Tb.**

Fig. 11.4.1 LH outswing

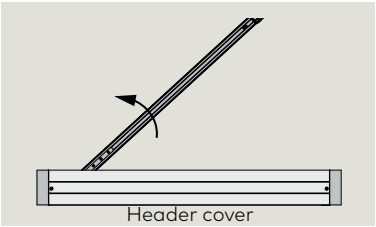

Fig. 11.4.2 RH outswing

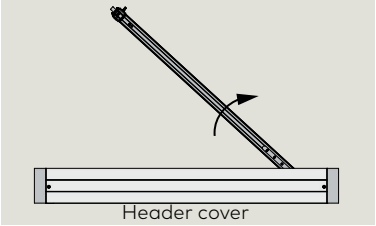

Fig. 11.4.3 LH inswing

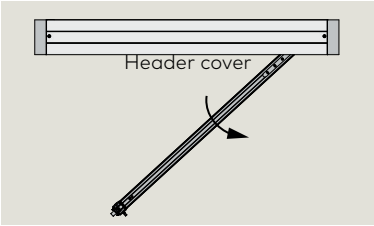

Fig. 11.4.4 RH inswing

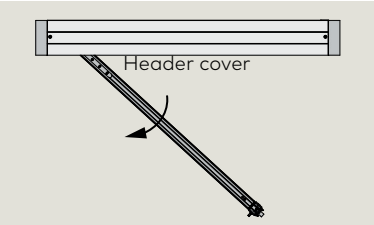

Fig. 11.4.5 Outswing

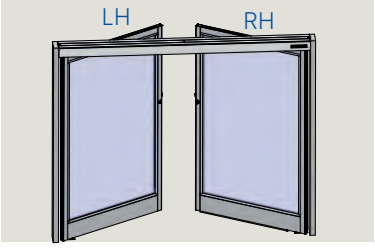

Fig. 11.4.6 Inswing

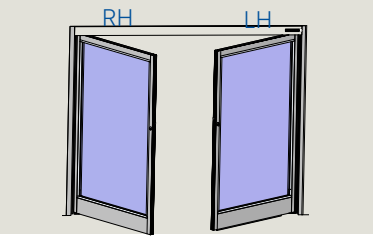

Fig. 11.4.7 LH double egress

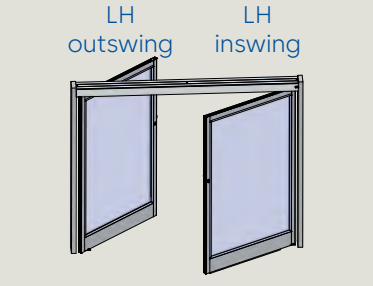

Fig. 11.4.8 RH double egress

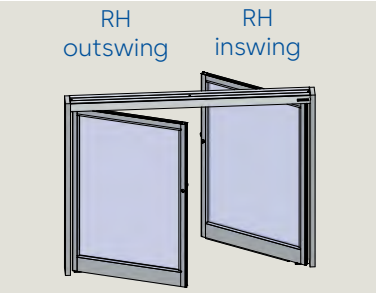

11.5 Set door width parameter **Tb**

11.5.1 Measure door width.

1. Measure door width in inches or mm

11.5.2 Set Tb door width parameter value.

NOTICE

1. **If door width = 40 - 43 15/16", Set Tb = 10.**
   - "10" is **Tb** factory setting.
   - **For system to recognize Tb = 10, steps in Para. 11.5.3 must be followed.**
2. **Set TB** parameter to value other than 10.
   - Follow steps in Para. 11.5.4

11.5.3 Set parameter TB value = 10.

Step 8 Press ▼	rb	Scroll to **Tb** parameter.
Step 9 Press ▶	10	Displays "10", factory setting.
Step 10 Press ▶	10	"10" starts flashing.
Step 11 Press ▲▼	11	Scroll to 11
Step 12 Press ▲▼	10	Scroll to 10
Step 13 Press ▶	10	Saves value. Display stops flashing.
Step 13 Press ◀	rb	Returns to door width parameter.
Step 14		**Go to Para. 10.6, Set reveal depth rd.**

Table 11.5.1 Tb parameter values

Tb	rb	**Door width**
Door width measurement		
Inches	[mm]	**Tb**
28 - 31 15/16	[711] - [811]	7
32 - 35 15/16	[813] - [912]	8
36 - 39 15/16	[914] - [1014]	9
40 - 43 15/16	[1016] - [1116]	**10***
44 - 47 15/16	[1118] - [1218]	11
48 - 51 15/16	[1219] - [1319]	12

Tb factory setting = 10.

11.5.4 Set parameter TB to value other than 10.

Step 8 Press ▼	rb	Scroll to **Tb** parameter.
Step 9 Press ▶	10	Displays "10", factory setting.
Step 10 Press ▶	10	"10" starts flashing.
Step 11 Press ▲▼	11	Scroll to 11 (Door width = 44 - 47 15/16" as example)
Step 12 Press ▶	11	Saves value entered. Display stops flashing.
Step 13 Press ◀	rb	Returns to door width parameter.
Step 14		**Go to Para. 11.6, Set reveal depth parameter rd.**

11.6 Set OHC reveal depth parameter **rd** = 0

Fig. 11.6.1 Reveal depth parameter rd

2	rd	rd	Reveal depth

rd factory setting = 0.

11.6.1 Set rd reveal depth parameter value to 0.

NOTICE

1. **OHC reveal depth = 0, set rd = 0**.

- "0" is **rd** factory setting.
- **For system to recognize rd = 0, steps in Para. 11.6.2 must be followed.**

11.6.2 Set parameter rd, reveal depth = 0.

Step 15 Press ▼	rd	Scroll to **rd** parameter.
Step 16 Press ▶	00	Displays "00" , factory setting.
Step 17 Press ▶	00	"00" starts flashing.
Step 18 Press ▲▼	01	Scroll to "01".
Step 19 Press ▲▼	00	Scroll to "00".
Step 20 Press ▶	00	Saves value. Display stops flashing.
Step 21 Press ◀	rd	Returns to reveal depth parameter.
Step 21		**Go to Para. 11.7, Set door type parameter dL.**

11.7 Set door type parameter **dL**

Table 11.7.1 Door type parameter dL values.

dL	**Door type**
Parameter value	Parameter description
0*	Single door
1	Pair doors, with astragal. Active door operator, door opens first.
2	Pair doors, with astragal. Inactive door operator.
3	Pair doors, without astragal. Active door operator. Both doors open simultaneously.
4	Pair doors, without astragal. Inactive door operator. Both doors open simultaneously.

***dL** factory setting = 0.

Fig. 11.7.1 4 button keypad, 2 digit display

1 4 button keypad
2 2 digit display

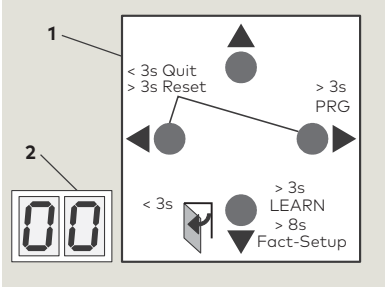

TIPS AND RECOMMENDATIONS

If display shows 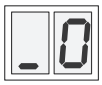 after basic parameters have been set:

- Press ▼ for 3 seconds.
- will be displayed.

11.7.2 Set dL door type parameter value.

NOTICE

1. **Set dL = 0** (single door =0).

- "0" is **dL** factory setting.
- **For system to recognize dL**= 0, **steps in Para. 11.7.3 must be followed.**

dL must be set to "0" for single door commissioning.

11.7.3 Set parameter dL, door type = 0.

Step 22 Press ▼		Scroll to **dL** parameter.
Step 23 Press ▶		Displays "00" , factory setting.
Step 24 Press ▶		"00" starts flashing.
Step 18 Press ▲▼		Scroll to "01".
Step 18 Press ▲▼		Scroll to "00".
Step 25 Press ▶		Saves value. Display stops flashing.
Step 26 Press ◀	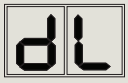	Returns to door type parameter.
Step 27 Press ◀		Exits program mode.

11.8 Perform partial learning cycle to rotate arm to door installation position

TIPS AND RECOMMENDATIONS

- Arm must be blocked at door closed position (0 degrees) during the learning cycle so that it cannot travel past this position in the door closing direction.
- Partial learning cycle will position arm at 70 degree position for door installation.

CAUTION

Learning cycle must be performed while motor is cold!

CAUTION

Verify that the following have been set
1. AS parameter- Para. 11.4
2. Tb parameter - Para. 11.5
3. Braking circuit plug - Para. 11.2
4. Spring tension - Para. 11.1

Fig. 11.8..1 RH outswing arm block

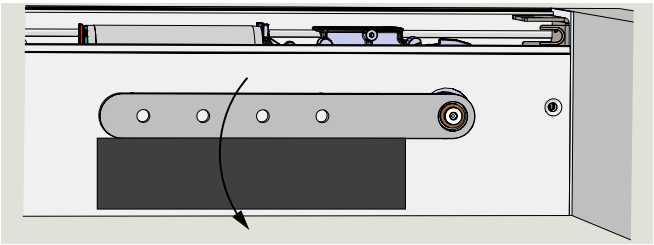

Fig. 11.8.2 LH inswing arm block

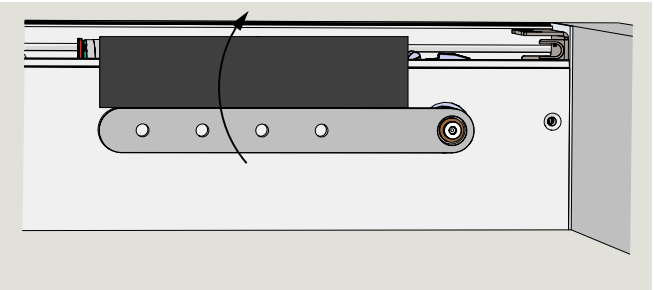

	Operator spring tension too low. • Display with small rotating "o" and an "F" during learn cycle indicates spring tension is too low. • Arm rotates to closed position. 1. Increase spring tension (Para. 11.1). 2. Restart learning cycle (Step 1).

11.8.1 Initiate learning cycle to rotate arm.

Step 1		Block arm at door closed position. Hold block in place [Use caution!], or clamp block to header, against the arm **in door closing direction** during learning cycle

WARNING

Use caution when in close proximity to overhead arm during learning cycle!

Step 2		Set Mode switch to CLOSE position.
		Rotating "o" and a "0" indicates operator learning cycle is required.
Step 3 Press ▼		Press and hold down button until display changes. • Arm first rotates to find door closed position. **See Step 1: Arm must be blocked so arm cannot travel past the door closed position.** • Arm performs several movements and display shows a sequence of symbols. • Movements of arm must not be interrupted!
		Display indicates arm is at 70° position. Reference Fig. 11.8.4.
Step 4		If desired, manually move door to 900 position for door installation.

11.8.2 Remove block.

CAUTION

Do not turn off power!
System is ready for door installation.

Fig. 11.8.3 Overhead arm at zero degree closed position.

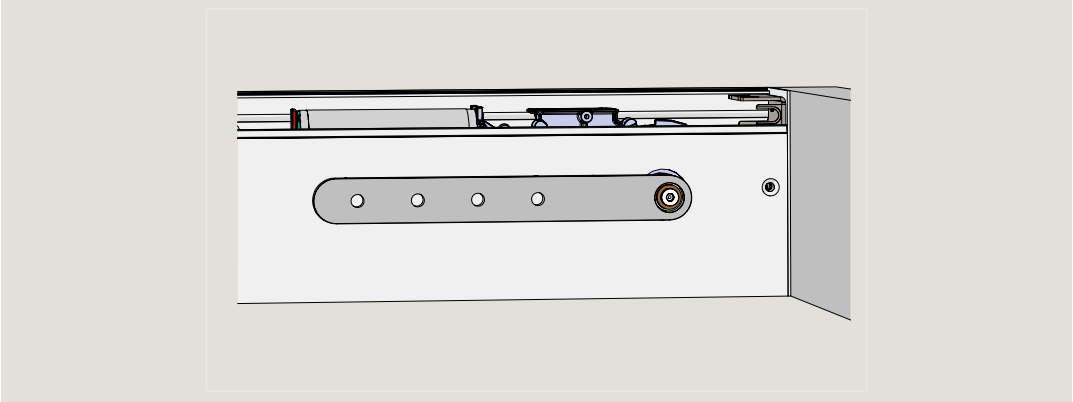

Fig. 11.8.4 Overhead arm at 70 degree position for door installation; LH inswing example

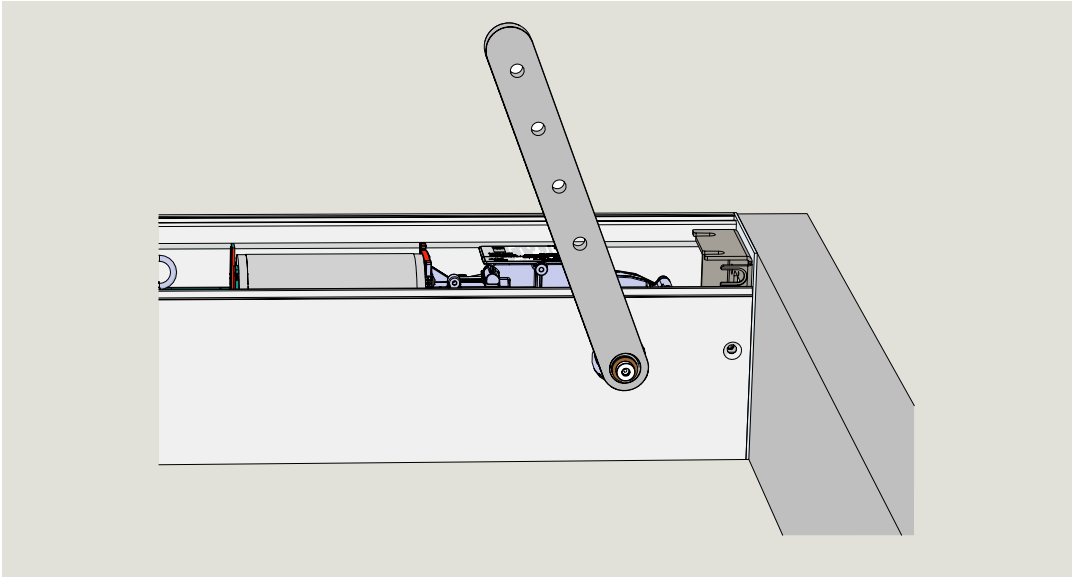

11.8.3 Door overhead arm configurations.

Fig. 11.8.5 LH outswing

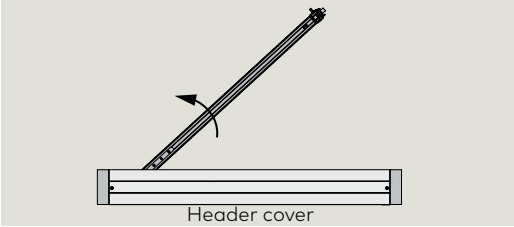

Fig. 11.8.6 RH outswing

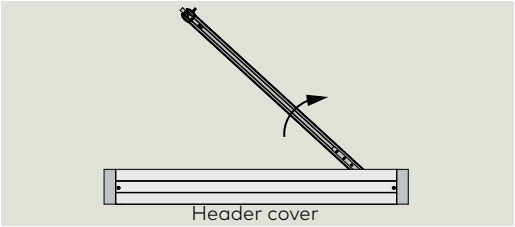

Fig. 11.8.7 LH inswing

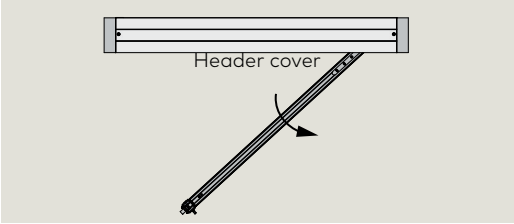

Fig. 11.8.8 RH inswing

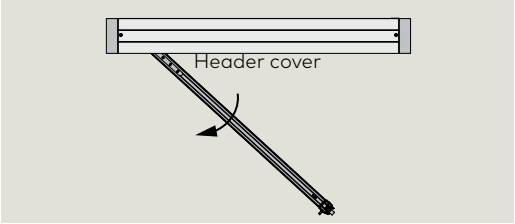

12 Single door installation

12.1 Customer supplied single door - installation

Fig. 12.1.1 Jambs and header, LH inswing example, plumb centerline

1 Overhead arm
2 Floor pivot

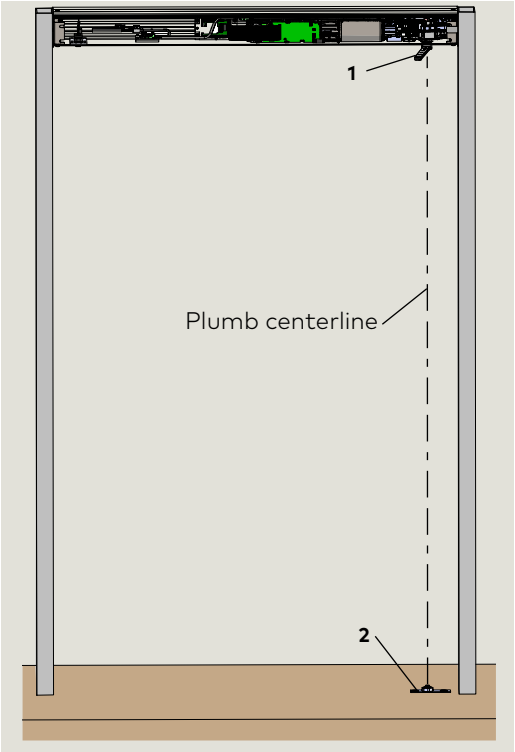

NOTICE

Door and jambs by customer.
Door installation:
Customer responsibility.

WARNING

Door installation must meet ANSI/BHMA standards as well as any applicable local building codes.

NOTE: Reference Chapter 18 of installation manual DL4616-010 for door preparation.

12.1.1 Conditions prior to installing door.

1. Overhead arm rotated to 70° open position or greater (Fig. 11.8.4).
2. Floor pivot installed by customer.
3. Door bottom pivot hardware installed in floor by customer

CAUTION

Jamb edge to floor pivot centerline distance: 3 3/4".
Reference Para. 12.3.

12.1.2 Check ED operator to floor pivot plumb.

NOTICE

Using plumb bob, check
ED operator axle to floor pivot plumb.

12.2 Install floor pivot shaft bearing

Fig. 12.2.1 Floor pivot and bearing

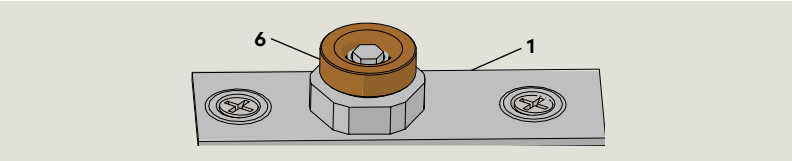

1 Floor pivot **6** Bearing

12.2.1 Install floor pivot shaft bearing.

1. Place bearing on floor pivot shaft.

12.3 Hang door

Fig. 12.3.1 Door positioned for installation

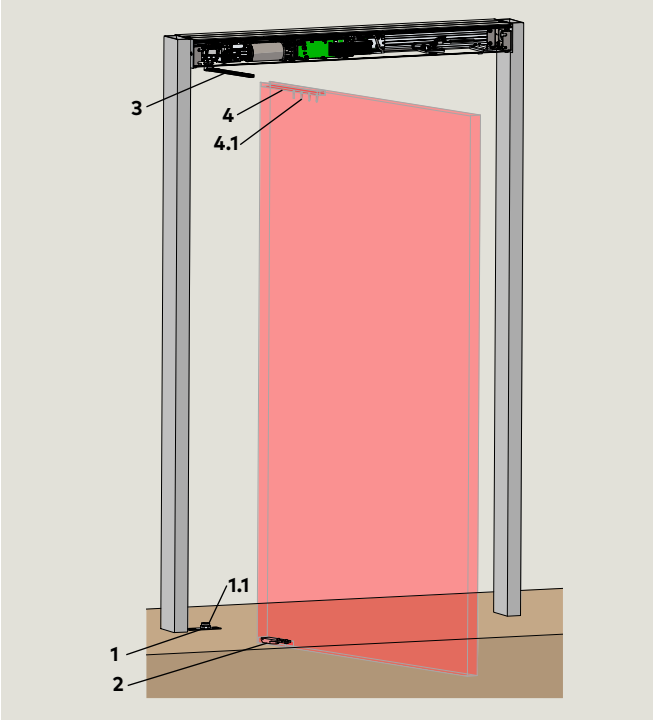

1	Floor pivot	**4**	Overhead arm door mortise
1.1	Bearing	**4.1**	Clearance holes for 1/4 x 1" SHCS
2	Door bottom pivot		
3	Overhead arm		

Fig. 12.3.2 Slide door onto bottom pivot

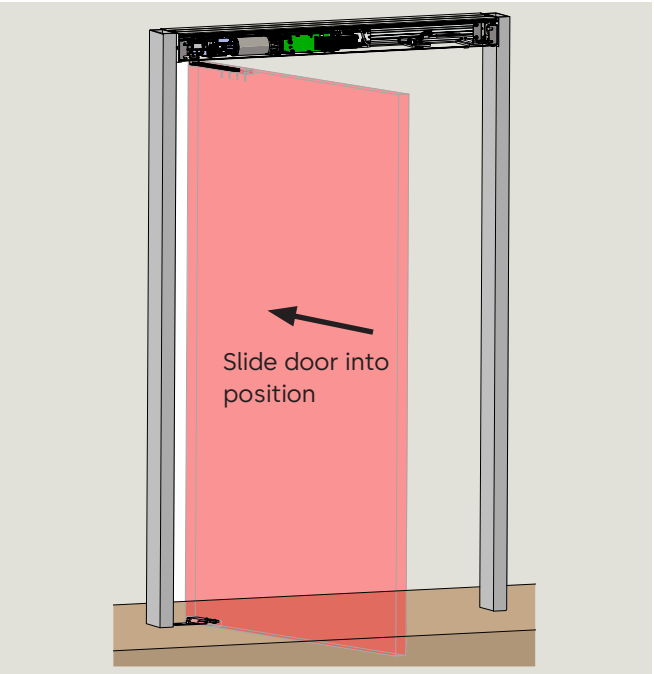

12.3.1 Hang door. RH inswing example.

TIPS AND RECOMMENDATIONS

A second person is recommended for door installation!

WARNING

Hand pinch point and crushing hazards during door install.

WARNING

Crushing hazards during door install.

12.3.2 Move door under overhead arm.

1. Hold door vertical and parallel to overhead arm.
2. Move door under overhead arm (Fig. 12.3.2).

12.3.3 Slide door onto bottom pivot.

1. Slide bottom door pivot release lever over bottom pivot (Fig. 12.3.1) until door lowers onto bottom pivot bearing (Fig. 12.3.4).
   - Bottom door pivot release lever holds door bottom pivot in place over bearing.
2. Overhead arm mounting holes should be aligned with hex bolt clearance holes in overhead arm mortise (Fig. 12.3.3).

Fig. 12.3.3 Overhead arm in door mortise

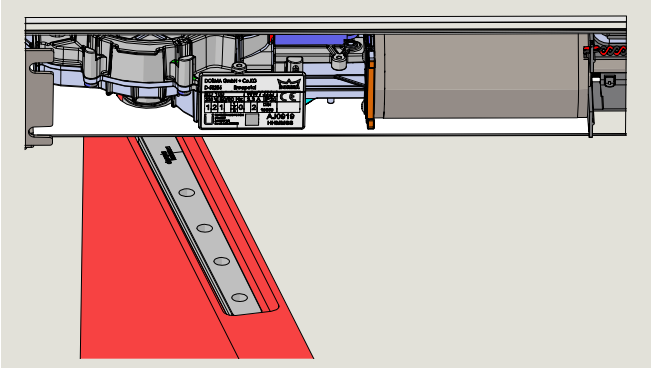

Fig. 12.3.4 Door bottom pivot on floor pivot bearing

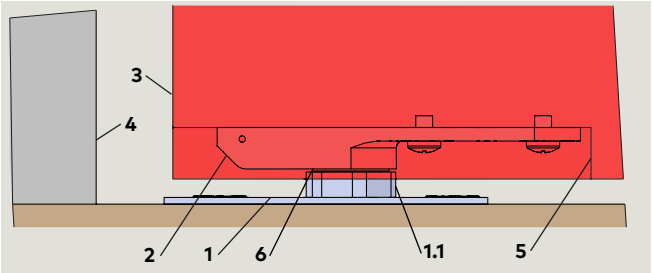

1	Floor pivot	**4**	Jamb
1.1	Height adjustment	**5**	Door bottom pivot mortise
2	Door bottom pivot	**6**	Bearing
3	Door		

Fig. 12.3.5 Securing door to overhead arm

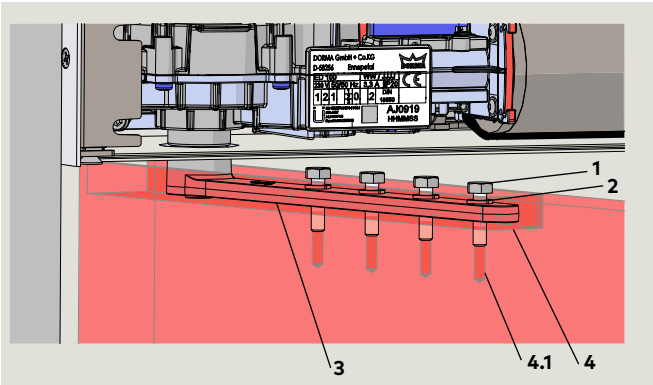

1	1/4-20 x 1" hex bolts	**3**	Overhead arm
2	Lock washer, 1/4"	**4**	Door mortise
		4.1	Clearance hole for hex bolts

Fig. 12.3.6 Door mortise surface in contact with arm

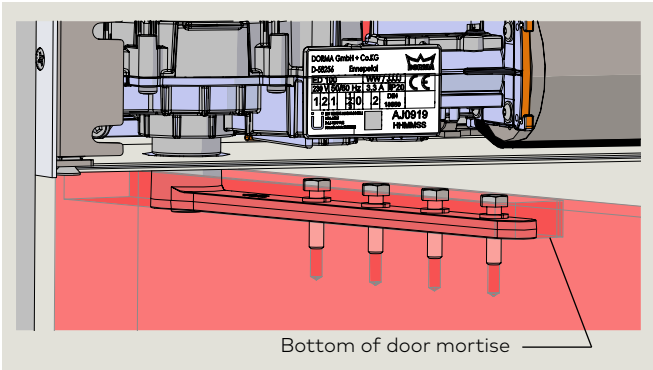

Fig. 12.3.7 Overhead arm hex bolts tightened

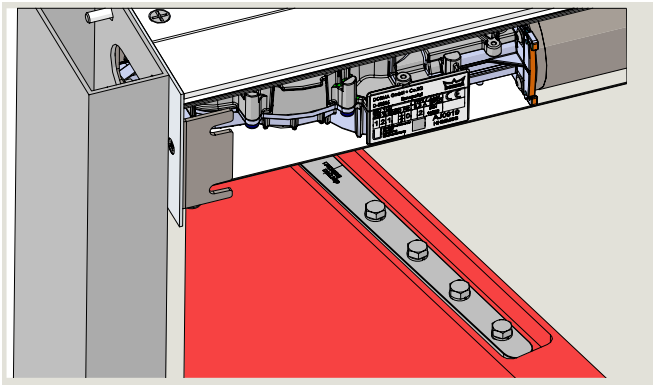

Fig. 12.3.8 Height adjustment wrench 08046540

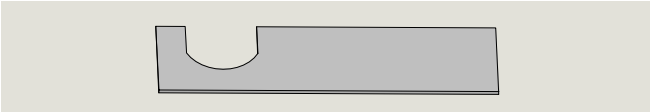

3	Power switch
4	115 Vac power module

Fig. 12.3.9 115 Vac power module

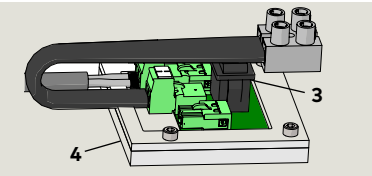

12.3.4 Secure door to overhead arm.

1. Insert 1/4" lock washer onto each 1/4" x 1" hex bolt and thread bolts into door clearance holes.

- Do not tighten bolts; leave gap between bolt heads and overhead arm (Fig. 12.3.5).

12.3.5 Raise door to contact overhead arm, tighten arm hex bolts.

1. Using height adjustment wrench (Fig. 12.3.8), raise door by turning floor pivot adjustment nut until door mortise contacts bottom of overhead arm (Fig. 12.3.6).
2. Tighten four overhead arm hex bolts (Fig. 12.3.7).

12.3.6 Check door plumb and level.

1. Check door plumb and level.

- Adjustment can be made by loosening fasteners in floor pivot slotted holes and adjusting floor pivot as required.

Fig. 12.3.10 Door installed; check plumb and level

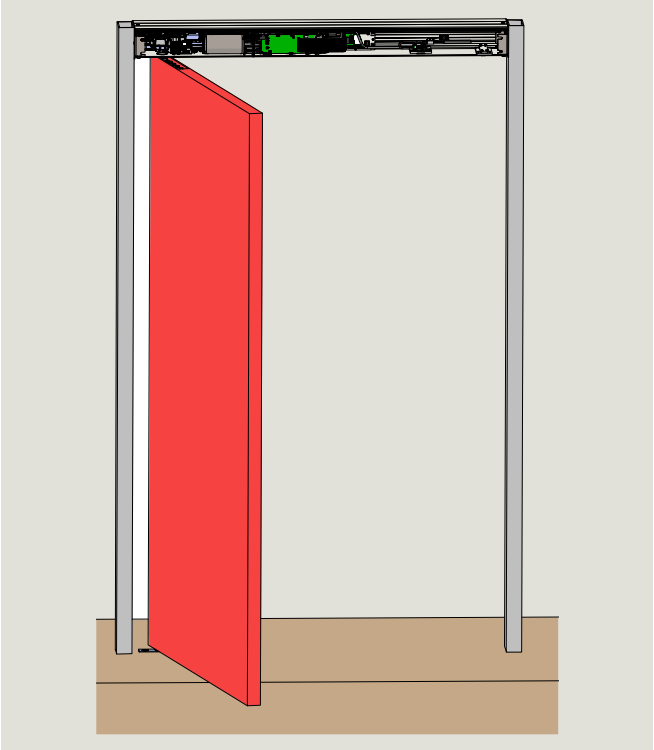

12.3.7 Turn off power.

1. After Para. 12.3.6 has been completed, turn off power.

CAUTION

Door will close once power is turned off.

12.3.8 Check all door clearances.

1. Once door is closed, make door clearance adjustments as required.

12.4 Perform learning cycle

CAUTION

Learning cycle must be performed while ED50/ED100/ED250 motor is cold!

CAUTION

Door must not be manually moved or held in position during the learning cycle!

TIPS AND RECOMMENDATIONS

During learning cycle:

- Safety sensors and activators, are switched off to ensure learning cycle sequence is not interrupted.
- Operator functions are deactivated.

WARNING

No personnel or objects must be in range of door motion during learn cycle!

Operator spring tension too low.

- Display with small rotating "o" and an "F" during learn cycle indicates spring tension is too low.
- Door will close.

1. Increase spring tension (Para. 11.1).
2. Restart learning cycle (Step 2).

12.4.1 Perform learning cycle.

1. Turn power switch on.

Step 1		Secure motion range of door.
Step 2	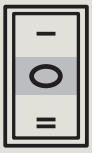	Set Mode switch to CLOSE position.
		Rotating "o" and a "0" indicates operator learning cycle is required.
Step 3 Press ▼		Press and hold down button until display changes. • Door performs several movements and display shows a sequence of symbols. • Movements of door must not be interrupted!
Step 4		Display indicates door is at 70° position and is waiting for door opening angle to be set. • Manually move door to desired opening angle. Maximum door angle is 110°.
Step 5 Press ▼		Momentarily press down button to continue learning cycle. • Door performs several movements and display shows a sequence of symbols. • Movements of door must not be interrupted!
		Door completes learning cycle. • Display with two horizontal bars indicate operator is ready for operation. • Door is closed.
Step 6 Press ▼		Momentarily press down button to cycle door.
Step 7		Following automatic learning cycle, actual forces on door, and door opening and closing times must be measured and changed if necessary to ensure compliance with ANSI/BHMA standards, reference Chapter 19.
Step 9		Set Mode switch to Auto.

13 Set power fail closing speed

13.1 Set power fail closing speed

Fig. 13.1.1 Power fail closing speed potentiometer, ED100/ED250 operator on RH side of header example

1 Power fail closing speed potentiometer
2 Control board
3 Power switch

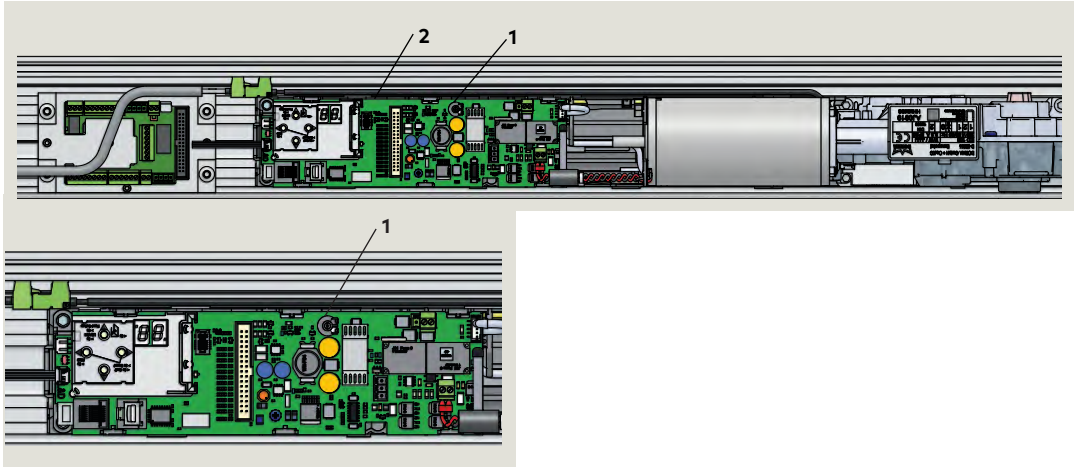

13.1.1 Power fail closing speed potentiometer.

- Single turn
- Factory setting: fully CCW
- CCW increases closing speed.
- CW decreases closing speed.
- 3/32" [2-3 mm] flat blade screwdriver required for adjustment.

13.1.2 Setting door closing speed upon power failure.

1. Turn ED50/ED100/ED250 power switch OFF.
2. Manually open door to 90° angle and let it close.
3. If door closes in less than 3 seconds, turn potentiometer 1/4 turn CW and retry test. Repeat as necessary.

TIPS AND RECOMMENDATIONS

Total door closing time from full open to fully closed should not be less than 5 seconds.
Reference Chapter 19; ANSI/BHMA standards.

NOTICE

It is imperative that this door closing time be set.
If door closes in less than three seconds, error message **E 73** (System error 3, braking circuit) will be displayed.
Reference Appendix B, Troubleshooting.

14 Pair door installation

14.1 Customer supplied doors - pair door installation

NOTICE

Door, jambs, and finger guards by customer.
Door installation:
Customer responsibility.

WARNING

Door installation must meet ANSI/BHMA standards as well as any applicable local building codes.

14.1.1 Conditions prior to installing doors.

1. System setup (Chapter 11) performed for each ED operator.
2. Overhead arms rotated to 700 open position or greater.

14.1.2 Floor pivots installed by customer.

1. Floor pivots installed by customer.

CAUTION

Jamb edge to floor pivot centerline distance: 3 3/4". Reference Paa. 12.3.

2. Bottom pivot hardware installed in floor by customer for both doors.

14.1.3 Check ED operator axle to floor pivot plumb.

NOTICE

Using plumb bob, check ED operator axle to floor pivot plumb for each door.

14.1.2 Hang doors - reference single door installation.

1. Reference steps in Chapter 12, single door to hang each door.

14.2 Perform learning cycle for each door

14.2.1 Perform learning cycle for each door.

- Reference Chapter 12, Para. 12.6.

14.3 Set power fail closing speed

14.1.2 Set power fail closing speed for each door.

- Reference Chapter 13.

Fig. 14.1.1 Pair door inswing example; ready for door installation

1 Overhead arm rotated to 70 degrees or greater
2 Floor pivot

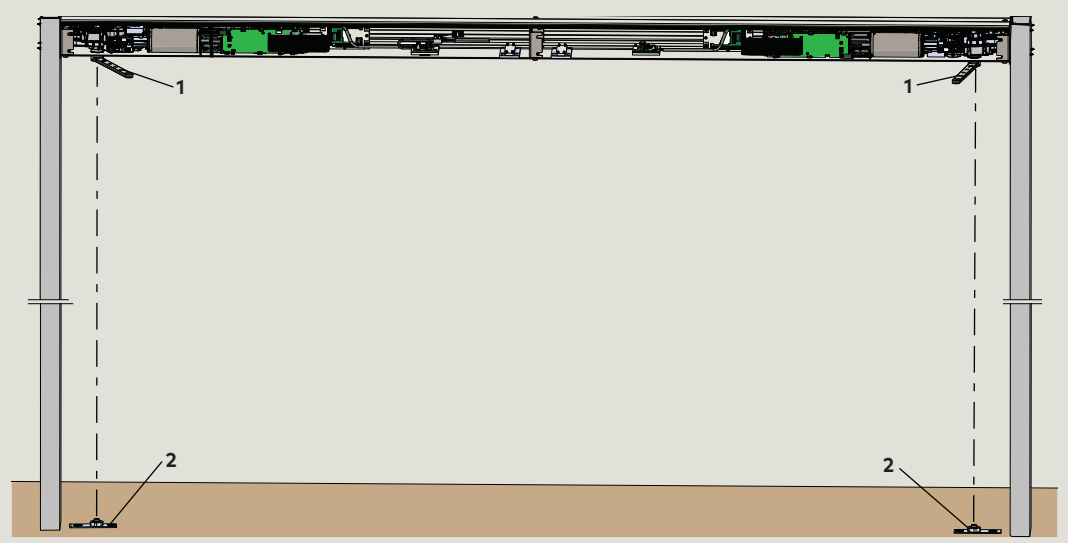

15 Pair door parameters, Sync cable

CAUTION

Both doors must have full learning cycles completed; reference Chapter 12.

15.1 Set ED operator parameters for pair door operation

NOTICE

If using BEA LZR Microscan, **dL** parameter must be "0" for each door.

15.1.1 Active door, set parameters dL and Ad.

1. Set Mode switch to CLOSE.
2. Set parameters **dL** (door type) and **Ad** (castor angle)for active door.

- Castor angle sets opening angle of active door before passive door starts to open.
  Factory setting is 30°.

Fig. 15.1.1 Mode switch

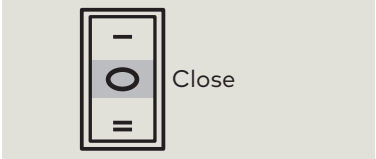

Step 1 Press ▶	AS	Press and hold right button greater than 3 seconds to enter program mode, AS parameter displayed.
Step 2 Press ◀	dL	Scroll to **dL** parameter.
Step 3 Press ▶	00	Displays "00" , factory setting.
Step 4 Press ▶	00	"00" starts flashing.
Step 5 Press ▲▼	01	Scroll to select parameter value ("1" as an example).
Step 6 Press ▶	01	Saves value entered. Display stops flashing.
Step 7 Press ◀	dL	Returns to door type parameter.

dL	**Door type**
Parameter value	Parameter description
0*	Single door
1	Pair door, with astragal. Active door operator, door opens first.
2	Pair door, with astragal. Passive door operator.
3	Pair door, without astragal. Active door operator. Both doors open simultaneously.
4	Pair door, without astragal. Passive door operator. Both doors open simultaneously.
*	Factory setting

Step 8 Press ▼	Ad	Scroll to **Ad** parameter.
Step 9 Press ▶	30	Displays "30", factory setting.
Step 10 Press ▲▼	10	Scroll to select parameter value (10° as an example).
Step 11 Press ▶	10	Saves value entered. Display stops flashing.
Step 12 Press ◀	Ad	Returns to caster angle parameter.
Step 13 Press ◀	_ _	Exits program mode.

15.1.2 Passive door, set parameter dL.

1. Set Mode switch to CLOSE.
2. Set parameter **dL** (door type) for passive door.

Step 1 Press ▶	AS	Press and hold right button to enter program mode, AS parameter displayed.
Step 2 Press ▼	dL	Scroll to **dL** parameter.
Step 3 Press ▶	00	Displays "00" , factory setting.
Step 4 Press ▶	00	"00" starts flashing.

NOTICE

Pairs must be:
- 1 (active) and 2 (inactive) or
- 3 (active) and 4 (inactive).

Step 5 Press ▲▼	02	Scroll to select parameter value ("2" as an example).
Step 6 Press ▶	02	Saves value entered. Display stops flashing.
Step 7 Press ◀	dL	Returns to door type parameter.
Step 8 Press ◀	_ _	Exits program mode. Operator is ready for operation.

15.2 Connect Sync cable between ED50/ED100/ED250 operators

Fig. 15.2.1 Pair door operators, Sync cable

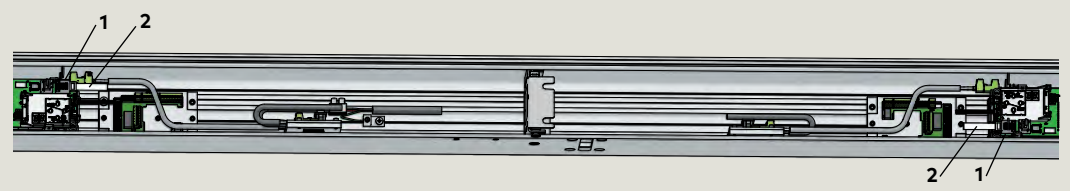

1 ED50/ED100/ED250 operator RJ45 jack (horizontal) for Sync cable
2 Sync cable DX3485-030

*Ribbon cables not shown.

Fig. 15.2.2 Sync cable jack

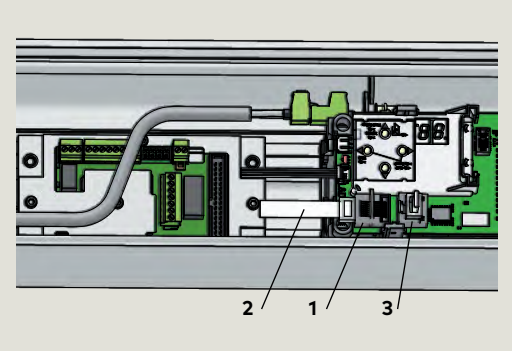

1 ED50/ED100/ED250 operator RJ45 jack (horizontal) for Sync cable
2 Sync cable DX3485-030
3 RJ45 jack for dormakaba handheld

Fig. 15.2.3 Sync cable DX3485-030

1 Sync cable 6.7' [2030 mm]
1.1 Ferrite bead
2 RJ45 connector

15.2.1 Install Sync cable.

NOTICE

Do not install Sync cable if using BEA LZR Microscan.
Reference ED100/ED250 Sensor Installation and Wiring Manual.

1. Set Mode switch to CLOSE.
2. Install and route Sync cable between the two operators.
3. Connect Sync cable to active and passive operator RJ45 horizontal jacks.
4. Secure cable inside header.

15.2.2 Test door operation

1. Set Mode switch to AUTO.
2. Test double door operation.

TIPS AND RECOMMENDATIONS

In sensors have not been connected, set Mode switch to OPEN, and after doors have opened set back to CLOSE.

16 Reserved

17 Connect accessory wiring

17.1 Connect accessory wiring, single door

Fig. 17.1.1 Accessory wiring terminal board, ED100/ED250 operator on left example

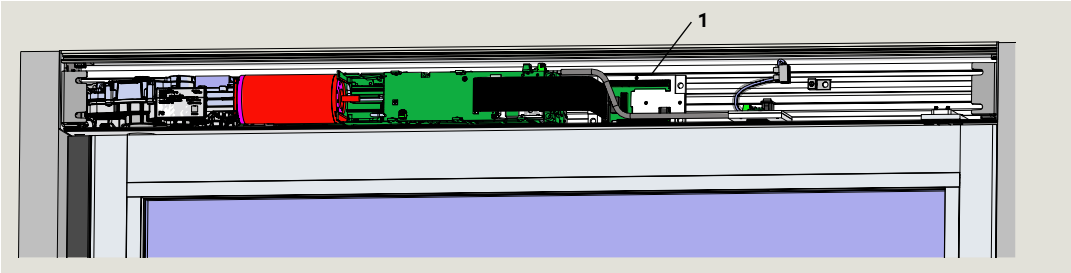

1 Low voltage terminal board module

17.1.1 Connect accessory wiring.

TIPS AND RECOMMENDATIONS

- Reference Chapter 8, Terminal board connections, for terminal board interfaces.
- Reference ED100/ED250 Sensor Installation and Wiring Manual.

1. Terminate all accessory wiring at ED50/ED100/ED250 low voltage terminal board in header.
2. Secure all accessory wiring.

17.1.2 Panic breakout switch wiring.

Reference OHC Installation Manual for switch installation on inswing doors.

1. Breakout switch wires terminate at X6-4 and 4a on ED100/ED250 terminal board. **Remove jumper between 4 and 4a** (Fig. 17.1.2).

Fig. 17.1.2 Terminals 4 and 4a

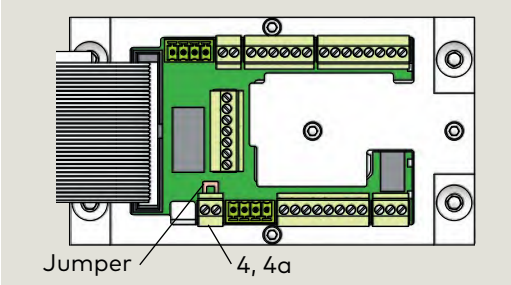

17.2 Connect accessory wiring, double doors

Fig. 17.2.1 Low voltage terminal board modules, double door

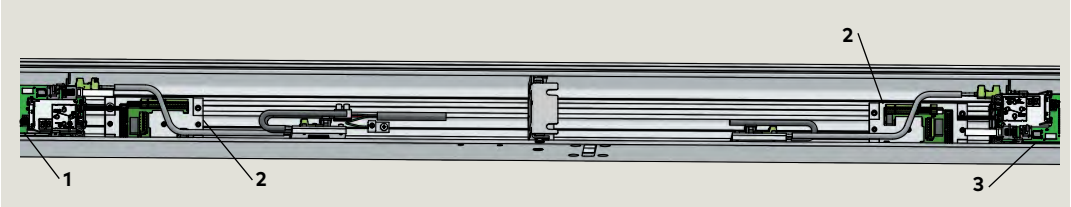

1 LH ED50/ED100/ED250 controller
2 Low voltage terminal board module
3 RH ED50/ED100/ED250 controller

17.2.1 Connect accessory wiring.

TIPS AND RECOMMENDATIONS

- Reference Chapter 8, Terminal Board Connections, for terminal board interfaces.
- Reference ED100/ED250 Sensor Installation and Wiring Manual.

1. Terminate all accessory wiring for both LH and RH doors at ED50/ED100/ED250 low voltage terminal board modules in header.
2. Secure all accessory wiring in header.

17.2.2 Panic breakout switch wiring.

Reference Para. 17.1.2.

17.2.3 Test system accessories.

Test functionality of all accessories.

18 Install door signage, header cover

18.1 Install door signage

18.1.1 Install door signage plated on type of door installation.

Install applicable door signage as outlined in Chapter 9, ED50/ED100/ED250 door signage.

18.2 Install header cover

18.2.1 Install header cover.

CAUTION

1. Ensure all wiring is secured inside of header.
2. Check tightness of all wiring connections.
3. Check ribbon cable connections.

Fig. 18.2.1 Single door header cover

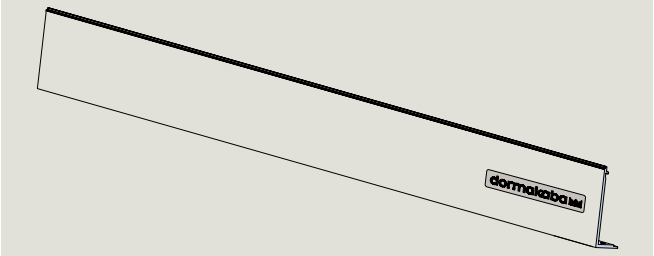

1. Secure header cover to jamb brackets with 1/4-20 x 1/2" flat head machine screws.

Fig. 18.2.2 Header cover fastener

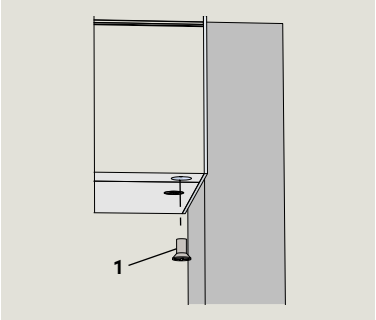

1 1/4-20 x 1/2" FHMS

19 ANSI/BHMA standards

19.1 Power operated pedestrian doors (ANSI/BHMA 156.10)

The following table references portions of content from ANSI/BHMA A156.10. Refer to the standard, available through ANSI or BHMA for additional information. Standard material reprinted with BHMA permission.

19.1.1 Door measurements, power operated swing door.

		ED100/ED250 Parameter			A156.10 standard	
Parameter		Function	Factory setting	Adjustment range	Para.	Requirement
So	Opening speed automatic mode	Swing door opening speed, automatic mode.	25°/s	8°/s - 60°/s	10.2.1	Opening time of a swing door to 80 °, not less than 1.5 s.
Sc	Closing speed automatic mode	Swing door closing speed, automatic mode.	25°/s	8°/s - 60°/s	10.2.5	Closing time of a swing door to latch check. Ref. Para. 19.1.2.
Fo	Static force in opening direction	Static force on door closing edge in opening direction.	Parameter setting *10 [60 N] 13.5 lb f	Parameter setting *10 20 N - 130 N 4.5 lb f - 29.8 lb f	10.2.2	Shall not exceed 30 lb f [133 N] measured 1" from lock edge of door.
Fc	Static force in closing direction	Static force on door closing edge in closing direction.	Parameter setting *10 [60 N] 13.5 lb f	Parameter setting *10 20 N - 130 N 4.5 lb f - 29.8 lb f	10.2.7	Not to exceed 30 lb f [133 N] measured 1" from lock edge of door at any point in closing cycle.
bc	Backcheck	Checking or slowing down of door speed before door being fully opened.	10°	5° - 40°	10.2.3	Shall occur at no less than 10° of full open position.
dd	Hold open time	Open time for swing doors using sensors or control mats upon loss of detection.	5 s	0 s - 30 s 0 s - 180 s F2 = 2.	10.2.4	Shall remain open a minimum of 1.5 seconds after loss of detection.
	Latch check	Checking or slowing down of door speed before door being fully closed.		Not adjustable	10.2.6	Shall occur for a swinging door at no less than 10° from closed position. The door will not close through the final 10° in less than 1.5 s.
hS	Reference Appendix B for parameter detail	Support for manual mode in door closed position.			10.2.8	Manual opening force in event of power failure. Swing door shall be capable of being opened manually with no greater than 30 lb f applied 1" from edge of lock style to open.
hA		Adjustment, door activation angle.				
hF		Power assist function.				

19.1.2 A156.10, 10.2.5 swing door closing time to latch check.

"D" door width, minimum (inches)	"W" door weight, maximum (pounds)	"T" closing time, minimum, to latch check (seconds)
36 or less	100	2.0
36	140	2.3
42	110	2.3
42	150	2.7
48	120	2.8
48	160	3.2

19.1.3 Other door weights and widths.

"D" door width, minimum (inches)	"W" door weight, maximum (pounds)	"T" closing time, minimum to latch check (seconds)
48	160	3.2

Closing time $T = (D\sqrt{W})/188$
D = Width of door in inches.
W = Weight of door in pounds.
T = Closing time to latch check in seconds.

19.2 Low energy power operated doors (ANSI/BHMA A156.19)

The following table references portions of content from ANSI/BHMA A156.19. Refer to the standard, available through ANSI or BHMA for additional information. Standard material reprinted with BHMA permission.

19.2.1 Door measurements, low energy power operated door.

ED50/ED100/ED250 Parameter					A 156.19 standard	
Parameter		Function	Factory setting	Adjustment range	Para.	Requirement
So	Opening time	Swing door opening speed, automatic mode	25°/s	8°/s - 27°/s	4.3	Opening Doors shall open from closed to back check or 80°, whichever occurs first, in 3 seconds or longer as required in Table I. Total opening time to 90° shall be as in Table II (next page) If door opens at more than 90°, it shall continue at the same rate as backcheck speed.
bc	Backcheck	Checking or slowing down of door speed before door being fully opened.	10°	5° - 40°	4.3	Backcheck shall not occur before 60° opening.
Sc	Closing speed	Swing door closing speed, automatic mode.	19°/s	8°/s - 27/s	4.5	Closing Doors shall close from 90° to 10° in 3 s or longer as required in Table I (next page). Doors shall close from 10° to fully closed in not less than 1.5 s.
dd	Hold open time	Hold open time	5 s	5 s - 30 s	4.4	Time delay When powered open, the door shall remain open at the fully opened position for not less than 5 s. Exception: when push-pull activation is used, the door shall remain at the fully opened position for not less than 3 s.
hS	Reference Appendix A for parameter detail.	Support for manual mode in door closed position.			4.6	Reference ANSI/BHMA A156.19, Para. 4.6, Force and Kinetic Energy.
hA		Adjustment, door activation angle.				
hF		Power assist function.				
Fo	Static force in opening direction	Static force on door closing edge in opening direction.	Parameter setting *10 60 N 13.5 lb f	Parameter setting *10 20 N - 60 N 4.5 lb f - 13.5 lb f	4.6	The force required to prevent a stopped door from opening or closing shall not exceed 15 lb f [67 N] measured 1" from latch edge of the door at any point during opening or closing.
Fc	Static force in closing direction	Static force on door closing edge in closing direction.	Parameter setting *10 60 N (*10) 13.5 lb f	Parameter setting *10 20 N - 60 N (*10) 4.5 lb f - 13.5 lb f	4.6	

Note 1: Speed may be slower after learning cycle completed.

19.2.2 A156.19, Table I: Minimum opening and closing times.

"D" door width, inches	"W" door weight, pounds				
	100	125	150	175	200
36	3.0 s	3.5 s	3.5 s	3.0 s	3.0 s
42	3.5 s	4.0 s	4.0 s	4.5 s	4.5 s
48	4.0 s	4.5 s	4.5 s	5.0 s	5.5 s
Minimum opening time to backcheck or 80 degrees (whichever occurs first). Minimum closing time from 90 degrees to latchcheck or 10 degrees (whichever occurs first).					

19.2.3 A156.19, Table II: Total opening time to 90 degrees.

Backcheck at 60°	Backcheck at 70°	Backcheck at 80°
Table I plus 2 s	Table I plus 1.5 s	Table I plus 1 s
If door opens more than 90°, it shall continue at the same rate as backcheck speed.		
Backcheck occurring at a point between positions shall use lowest setting.		

19.2.4 Other door weights and widths.

Closing time $T = (D\sqrt{W})/188$
D = Width of door in inches.
W = Weight of door in pounds.
T = Closing time to latch check in seconds.

20 Upgrade cards

20.1 Upgrade cards

20.1.1 Upgrade card installation.

dormakaba upgrade cards can be used to expand the range of functions of ED100/ED250 operators.
When upgrade cards are installed, information is exchanged between and permanently allocated to both the operator control unit and the upgrade card.

Fig. 20.1.1 Upgrade card slot

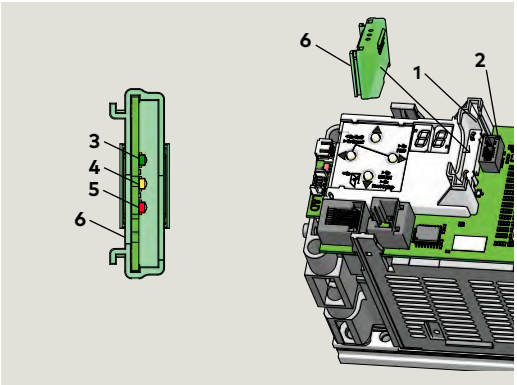

1 Upgrade card slot
2 Upgrade card socket
Status LEDs
3 Green LED
4 Yellow LED
5 Red LED
6 Upgrade card

20.1.2 Upgrade cards

Upgrade card	Part number	EDxxx	Upgrade card color
Fire protection	DX3461-003	ED100	Red
	DX3461-004	ED250	Transparent red
DCW	DX3461-007	ED100/ ED250	Yellow
Barrier free toilet	DX3461-006	ED100/ ED250	Grey

20.2 Container module

20.2.1 Container module

- The first upgrade card installed becomes the container module.
- Every operator control unit has only one container module.
- Functions of upgrade cards installed after the first upgrade card are saved in the container module.

20.2.2 Container module removal.

- If the container module is removed, all previously enabled functions will be deactivated **after a certain time.**

20.2.3 Operator control unit replacement.

- If the control unit is replaced, the container module is removed from the old control unit and inserted into the new control unit.
- The new control unit synchronizes with the container module and all upgrade card functions are available.

20.2.4 Inserting an upgrade card that has already been activated.

- Rapidly flashing yellow LED on upgrade card indicates card is rejected.
- Card's functions in operator control unit are still valid.

20.2.5 Inserted a container module from third party control unit.

- Rapidly flashing yellow and green LEDs on container module indicates module is rejected.
- Container module can only be synchronized with one control unit.

20.2.6 Container module defective.

- Upgrade cards that were installed after the container module must be reinstalled.

20.3 Installing upgrade cards

20.3.1 Set program switch to CLOSE.

1 Upgrade card slot
6 Barrier free toilet upgrade card
7 Container module
8 Mode switch
9 2 digit display with horizontal bars

Set Mode switch to Close.

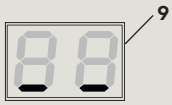

Horizontal bars indicate controller in stand by mode.

20.3.2 Installing first upgrade card.

1 Upgrade card slot
2 First upgrade card

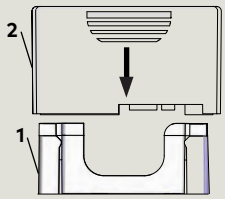

1. Insert first upgrade card into upgrade card slot.
2. This card will become container module.

4 Yellow LED
7 Container module

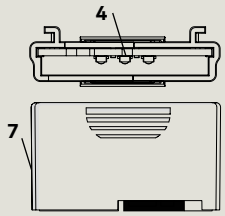

3. Yellow LED flashes on and off once during card insertion.

1 Upgrade card slot
3 Green LED
7 Container module

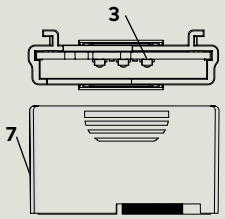

4. Green LED slowly flashes on and off indicating communication between card and control module.
5. Upgrade card becomes container module, green LED continues to slowly flash on and off.
- Upgrade card function is now available.

3 Green LED
7 Container module

TIPS AND RECOMMENDATIONS

Container module can be configured using applicable parameter (F1 - F8) for card. Reference Chapter 10, Parameters.

20.3.3 Installing additional upgrade cards.

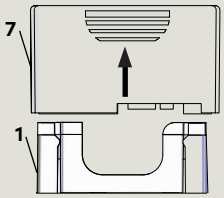

1. Remove container module from upgrade card slot.

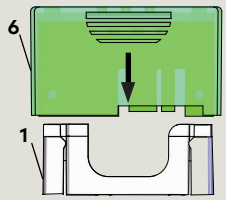

2. Insert next upgrade card into upgrade card slot.

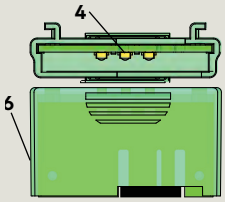

- Card function is copied to control module; upgrade card is then invalidated.
- Yellow LED indicates procedure is complete.

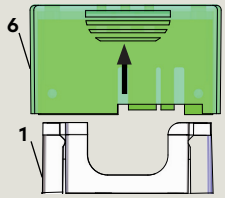

3. Remove upgrade card from upgrade card slot.

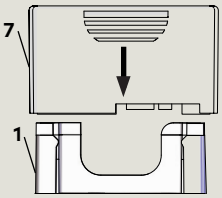

4. Reinsert container module into upgrade card slot.

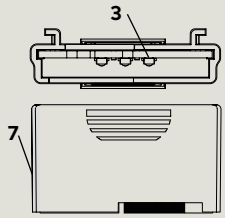

- Control unit recognizes container module; container module stores new functions.
- Green LED slowly flashes on and off indicating successful operation.
- New card functions are now available.

TIPS AND RECOMMENDATIONS

New upgrade card can be configured using applicable parameter (F1 - F8) for card. Reference Chapter 10, Parameters.

21 Maintenance

21.1 ED50/ED100/ED250 environment and cleaning

Table 21.1.1 Operator environmental requirements

Ambient temperature	5 to 122 °F

Fig. 21.1.1 ED50/ED100/ED250 OHC header and LH door

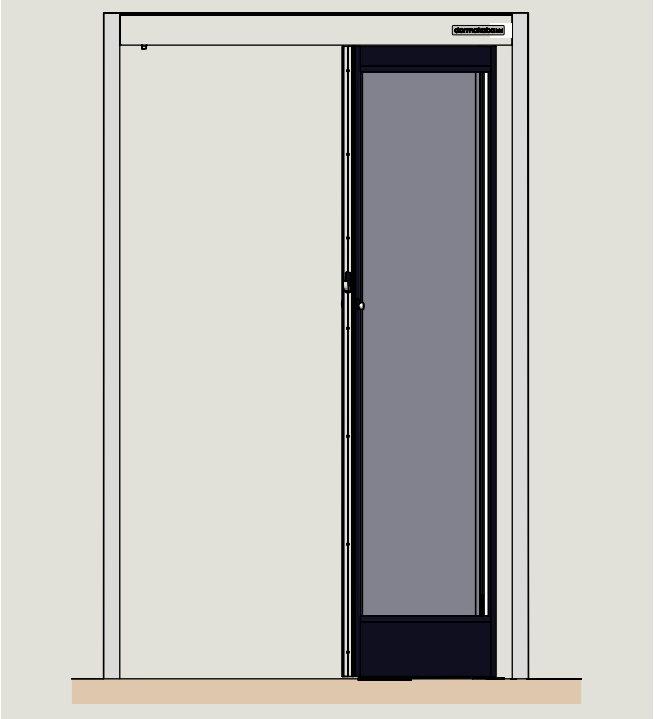

21.1.1 ED50/ED100/ED250 environmental requirements.

ED50/ED100/ED250 overhead concealed header assembly is designed to operate on an interior building surface under the specifications shown in Table 21.1.1.

21.1.2 Areas around door(s) and door swing radius.

Areas around doors and door swing radius must be kept clear of all obstacles.

21.1.3 Cleaning

WARNING

Cleaning of header surfaces must be done with program switch in Close position!

External surfaces of the header can be cleaned with a damp cloth and commercial cleaning agents.

TIPS AND RECOMMENDATIONS

Abrasive (scouring) agents should not be used as they may damage external header surfaces.

21.1.4 Water and other liquids.

CAUTION

No water or other liquids must be sprayed or spilled on ED50/ED100/ED250 OHC header!

21.2 Operator status LEDs, maintenance interval

Fig. 21.2.1 Operator status LEDs

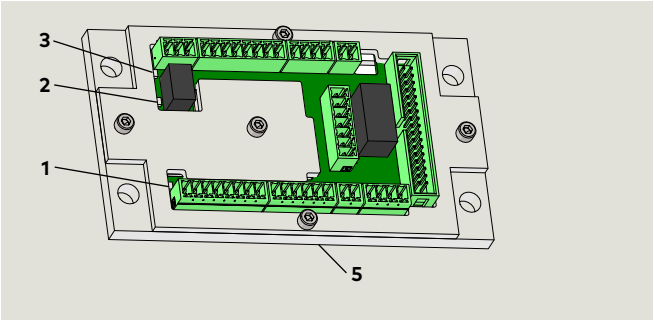

1 Red LED
2 Yellow LED
3 Green LED
4 PCB assembly
5 Accessory terminal board

21.2.1 Operator status LEDs, maintenance interval.

Header cover must be opened to view LEDs, located on accessory wiring terminal board.

1. Red LED
   Blinking codes are used to indicate "In__" information (system status or operating conditions) or certain error codes "E__".
2. Yellow LED
   Maintenance interval indicator. When illuminated, an indication the operator system has to be serviced.
3. Green LED

- On, internal 24 Vdc power is On.
- Off, internal 24 Vdc power is Off.

TIPS AND RECOMMENDATIONS

Details on LED status codes: Appendix B.2; Troubleshooting.

21.3 Overhead arm and bottom door pivot

Fig. 21.3.1 Axle extension and arm installation

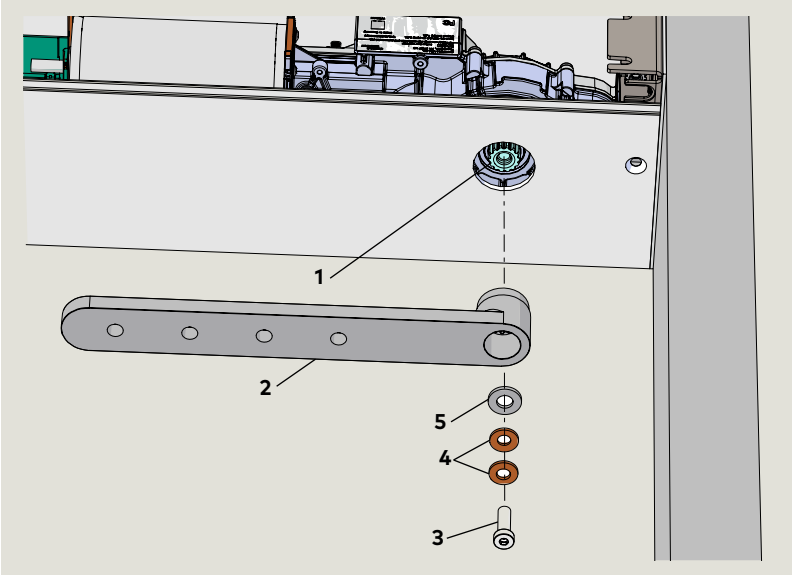

1	ED50 spindle	**3**	DC3404 M8-1.25 x 25 mm SHCS
2	OH center hung arm DC4689-001	**4**	DC3404-M8 conical spring lock washer
		5	DC3404 OHC washer

Fig. 21.3.2 Arm shown at 70 degrees for door removal and installation.

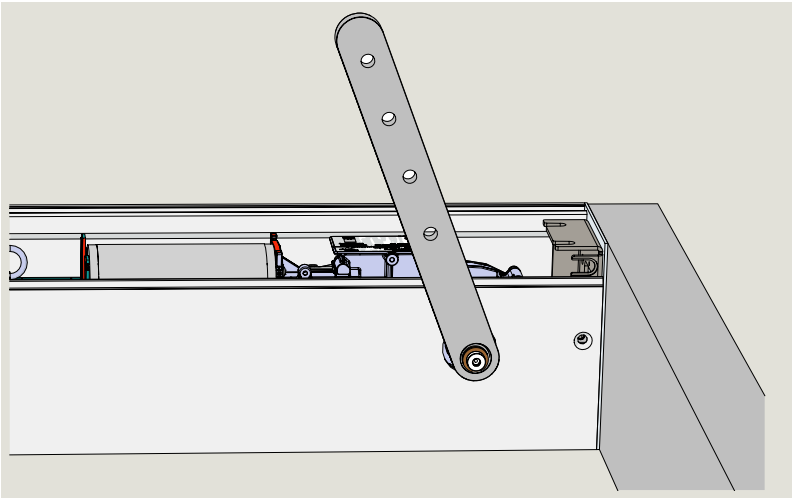

Fig. 21.3.3 Lower door pivot hardware example

10 Floor pivot
10.1 Bearing
11 Door pivot

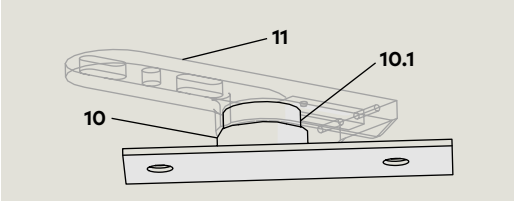

21.3.1 Check overhead arm and connection to drive axle.

1. Remove door(s).
- Door(s) must be removed to check overhead arm connection to drive axle and bottom door pivot.
- Reference Chapter 12, single door, or Chapter 14, double door, for door installation.

2. Check arm and extension hardware for wear and tear.

3. Check tightness of M8 SHCS.

CAUTION

Use Torque wrench with 5 mm hex key socket to tighten M8 screw to 26 ft-lb [35.3 Nm].

21.3.2 Check bottom pivot.

1. Check floor pivot:
- Wear and tear
- Fastener tightness

2. Check door pivot:
- Wear and tear
- Fastener tightness

21.3.3 Reinstall door(s).

1. Reinstall door(s) referencing Chapters 12 or 14 for door installation.

21.4 ED50 brake maintenance

Fig. 21.4.1 ED50 operator

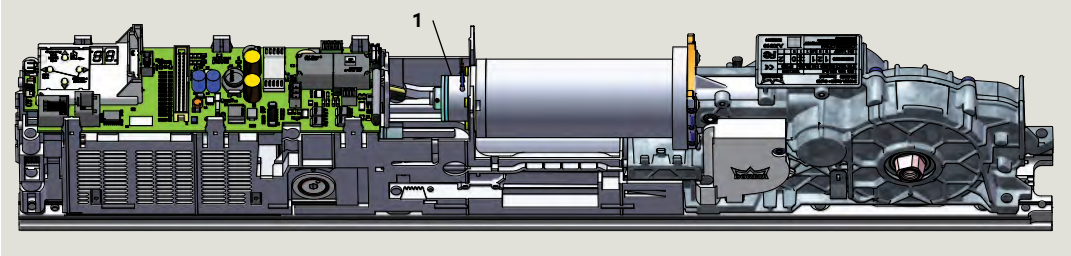

1 Brake assembly

Fig. 21.4.2 Brake to brake disc air gap

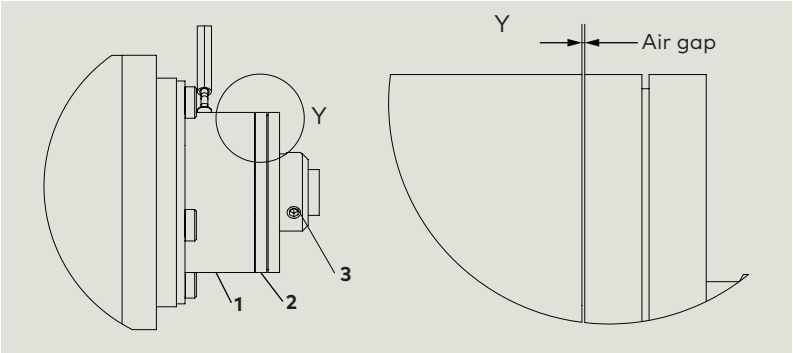

1 Brake assembly
2 Brake disc assembly
3 M3 x 3 SHCS

Fig. 21.4.3 Brake assembly

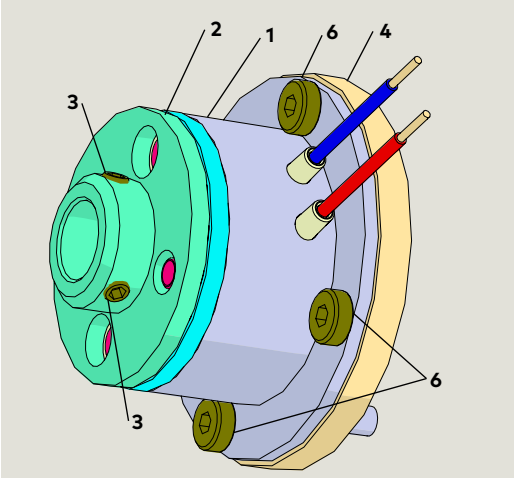

1 Brake assembly
2 Brake disc assembly
3 M3 x 3 set screw
4 Brake motor flange
6 M3 x 5 SHCS

Fig. 21.4.4 Feeler gauge set

21.4.1 Adjustment of air gap: brake to brake disc (Fig. 21.4.2).

TIPS AND RECOMMENDATIONS

Reference drawing:
254197-01-50

CAUTION

Turn program switch to CLOSE before performing maintenance.

CAUTION

Air gap setting between brake and brake disc:
0.1 mm to 0.3 mm
(0.004" to 0.012")

1. Using 2.5 mm hex key, loosen three M3 x 3 set screws securing brake disc to motor shaft.
2. Insert feeler gauge [air gap setting for sizing] between brake disc and brake.
3. Move brake disc against shim(s).
4. Screw M3 x 3 set screws against motor shaft but do not tighten.
5. Remove feeler gauge.
6. Tighten M3 x 3 set screws.

CAUTION

M3 x3 SHCS torque setting:
5.3 in-lb ±0.9 in-lb [0.6 Nm ±0.1 Nm].

TIPS AND RECOMMENDATIONS

Paper stock thickness:
approximately 0.003"

Fig. 21.4.5 M3 x 5 SHCS

1 Brake assembly
2 Brake disc assembly
6 M3 x 5 SHCS

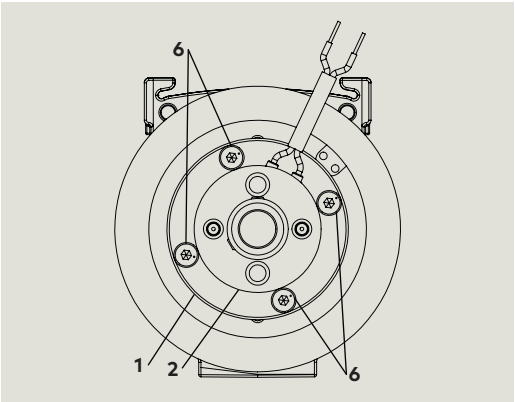

21.4.2 Torque setting of M3 x 5 SHCS.

- 5.3 in-lb + 0.9 in-lb [0.6 Nm +0.1 Nm]

Fig. 21.4.6 Brake disc assembly removed from brake

1 Brake assembly
2 Brake disc assembly
5 Motor shaft

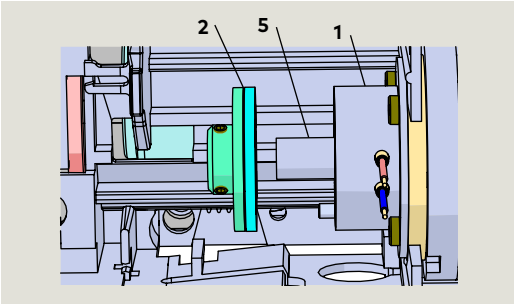

Fig. 21.4.7 Brake and brake disc assemblies

1 Brake assembly
2 Brake disc assembly
6 M3 x 5 SHCS

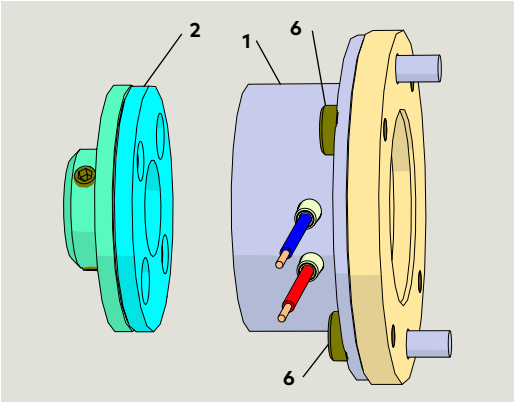

Fig. 21.4.8 Brake coil wiring

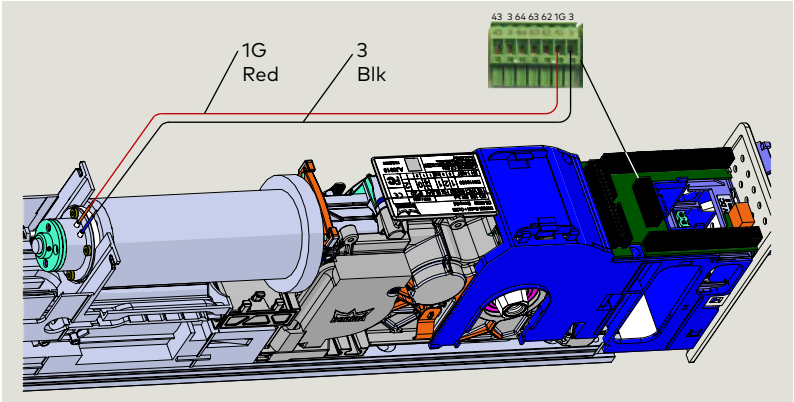

Appendix A - Driving parameters

A.1 Driving parameters – detail

A.1.1 Driving parameters detail.

Parameter		Value range	Units	Factory setting	Description
Opening speed, automatic mode					
5	So	ED50 8- 27*	°/s	**25**	**ED50: low energy only.** *ED50 adjustable opening speed range. **ED100/ED250** Full adjustable range of opening speeds available only when configured for full energy (Parameter F2). **Maximum opening speed reduced to 27°/s in low energy mode. 1. After adjustment, internal monitoring system checks if parameter setting is admissible. If setting exceeds admissible value, the setting is alternately displayed with the permissible value. 2. After adjustment, Internal monitoring system checks if parameter setting is admissible. If setting exceeds admissible value, the setting is alternately displayed with the permissible value. 3. After parameter set, verify setting meets ANSI/BHMA standards A156.10 (full energy) or A156.19 (low energy) standards. Reference Chapter 19.
		ED100 2- 50**	°/s		
		ED250 2 - 60**	°/s		
Closing speed, automatic mode					
5	Sc	ED50 8- 27*	°/s	**25**	**ED50: low energy only.** *ED50 adjustable closing speed range. **ED100/ED250** Full adjustable range of closing speeds available only when configured for full energy (Parameter F2). **Maximum closing speed reduced to 27°/s in low energy mode. 1. After adjustment, internal monitoring system checks if parameter setting is admissible. If setting exceeds admissible value, the setting is alternately displayed with the permissible value. 2. After adjustment, Internal monitoring system checks if parameter setting is admissible. If setting exceeds admissible value, the setting is alternately displayed with the permissible value. 3. After parameter set, verify setting meets ANSI/BHMA standards A156.10 (full energy) or A156.19 (low energy) standards. Reference Chapter 19.
		ED100 2- 50**	°/s		
		ED250 2 - 60**	°/s		
Hold open time, automatic mode					• Hold open time starts once all internal, external, safety and push and go inputs have been opened or dropped, and door is in an open position; Hold open time can be re-triggered. • Hold open time values from 0 to 30 are set in increments of 1 second. • *Parameter **F2**, when set to full energy, extends maximum hold open time to 180 seconds. • Hold open time values greater than 30 seconds are set in increments of 5 seconds.
7	dd	0 - 30	s	**5**	
		0 - 180*	s		
Night-bank hold open time					• Night-bank (key switch) hold open time is set using this parameter. • Night-bank Hold open time starts once contact on night-bank activator input is opened and door is in an open position; Night-bank hold open time can be re-triggered.
8	dn	0 - 30	s	**10**	

A.1.1 Driving parameters detail.

Parameter	Value range	Units	Factory setting	Description
Hold open time, manual opening				
9 do	0 - 30	s	**1**	• Default hold open time of 1 second that follows every manual opening of door can be adjusted using parameter **do**. • Hold open time starts when door is released.
Wall masking on door hinge side				
10 Sb / 88	60 - 99	°	**80**	• Wall masking required if door opens against an obstacle. • When door reaches set wall masking angle, system will ignore signal from safety sensor on door swing (hinge) side. • The wider the detection range of safety sensor used, the greater the area must be in which system has to ignore sensor's emitted signal. To ensure personnel safety, it is advised to keep this range as small as possible. • If set wall masking angle is exceeded when door is being opened, a rapidly flashing dot appears in top left hand corner of 2 digit display. • Rapidly flashing dot disappears when door angle drops below set wall masking angle.
Safety sensor test				
11 Sr / ST	0 - 8		**0**	Safety sensor parameter **ST** must be set to sensors used and if they are active-high or active-low. See E 04 safety sensor test error, Appendix B.
				0 Sensor test off.
				1 Sensor test on swing (hinge) side. Active-high
				2 Sensor test on swing and approach sides. Active-high
				3 Sensor test on swing and approach sides. Active-high
				4 Sensor test on swing side. Active-low
				5 Sensor test on approach side. Active-low
				6 Sensor test on swing and approach sides. Active-low
				7 Wall mounted sensor with data line. Lock monitoring not available.
				8 Sensor test overhead sensor type Bodyguard III or Premier T with monitoring input.
Activation by safety sensor on approach (opposite hinge) side				
12 SA	0 - 1		**0**	0 Safety sensor's input is disregarded as soon as door is closed.
				1 Safety sensor can trigger an opening pulse while door is closed.
Suppression of safety sensor on swing (hinge) side during initialization drive				
13 SP	0 - 1		**0**	0 Safety sensor on swing side is active during an initialization drive after a power on reset.
				1 • With SP set to 1, operator will disregard swing side safety sensor during initialization drive. • After a power on reset, operator starts an initialization drive at slow speed. The initialization drive cannot be completed if safety sensor on hinge side is, or has been triggered.

A.1.1 Driving parameters detail.

Parameter	Value range	Units	Factory setting	Description
Delayed opening time for locking mechanism				• Delayed opening time delay starts as soon as door opening pulse has been generated. • Door opens on expiration of time delay. • If parameter is set to "0" and input for locking feedback contact is closed, door will not perform a preload **Pu** before door unlocks. • Since various motor locks do not have feedback contacts, a delay of up to 4 seconds is possible
14 Ud	0 - 40 * 100	ms	**3** *100	
Door preload prior to unlocking				• Door preload prior to unlocking; force with which door is pushed in the "closed" direction before door is opened. • The door may need to be pushed in closing direction (preload) in order to release electric strike to ensure door opens. • Preload time is set by parameter **Ud,** delayed opening time for locking mechanism. • To maintain long service life, set preload force only as high as necessary.
15 Pu	0 - 9		**0**	
Power reserve module SVP-PR 12 test				
16 rS / TS	0 - 1		**0**	0 Test off 1 **1. SVP-PR 12 power reserve module test** is performed once every 24 hours, or 10 minutes after AC power has been turned on. In event of an error: • Unlocking is not performed and no automatic door movements are initiated. • Error code **E 25** is displayed, See Appendix B, troubleshooting error codes. 2. SVP-PR 12 power reserve module can be used but must be tested on a regular basis if using: • SVP-2000 DCW emergency escape motor lock with automatic latching action. • M-SVP 2000 DCW emergency escape lock. 3. Test is automatically activated if a fire protection module is recognized in conjunction with SVP-2000 DCW or M-SVP 2000 DCW locks.
Static force in opening direction				ED50: Low energy only. ED100/ED250: can be configured for full energy using Parameter F2. • Static force in opening direction (basic parameter for wind load control). • Static force on door closing edge can be changed using this parameter. • After parameter adjustment, internal monitoring system checks if parameter setting is admissible. If setting exceeds admissible value, the setting is alternately displayed with the permissible value. 1. After parameter set, verify setting meets ANSI/BHMA standards. See Chapter 19.
17 Fo	Low Energy ANSI/BHMA A156.19 Parameter setting *10 20 N - 60 N 4.5 lbf - 13.5 lbf		**6**	
	Full Energy ANSI/BHMA A156.10 Parameter setting *10 20 N - 130 N 4.5 lbf - 29.8 lbf		**6**	

A.1.1 Driving parameters detail.

Parameter	Value range	Units	Factory setting	Description
Static force in closing direction				
17 Fc	Low Energy ANSI/BHMA A156.19 Parameter setting *10 20 N - 60 N 4.5 lbf - 13.5 lbf		**6**	ED50: Low energy only. ED100/ED250: can be configured for full energy using Parameter F2. • Static force in closing direction (basic parameter for wind load control). • Static force on door closing edge can be changed using this parameter. • After parameter adjustment, internal monitoring system checks if parameter setting is admissible. If setting exceeds admissible value, the setting is alternately displayed with the permissible value. 1. After parameter set, verify setting meets ANSI/BHMA standards. See Chapter 19.
	Full Energy ANSI/BHMA A156.10 Parameter setting *10 20 N - 130 N 4.5 lbf - 29.8 lbf		**6**	
Motor driven latching action, automatic mode				• System offers a motor driven latching action in automatic mode in addition to mechanical latching action. • Static force in opening direction (basic parameter for wind load control). • Low energy operator (ANSI/BHMA A156.19): static force range is reduced. • The **EP** parameter setting is designed to increase static force on door closing edge to ensure proper closing despite resistance caused by door seals or locking devices. 1. After **EP** parameter set, verify setting meets ANSI/BHMA standards. See Chapter 19. • After parameter adjustment, internal monitoring system checks if parameter setting is admissible. If setting exceeds admissible value, the setting is alternately displayed with the permissible value. 2. Setting should be increased step by step from a low setting so as to avoid damage to the system. Use the lowest possible setting. 3. Ensure that both the door itself and the push or pull arm installation are suitable for the additional, permanent forces.
19 EP	0 - 9		**0**	
Motor driven latching action angle				Door opening angle at which motor driven latching action **EP** is activated. • Starting angle of the latching angle adjustable from 10°.
20 EA	2 - 10	°	**3**	
Keep closed force				
21 FH	0 - 9		**0**	0 Off 1 to 9: • Keep closed force can be set from 0 (off) to 9, maximum force. • Keep closed force is: • Permanently applied following motor drive latching action. • Designed to keep door in closed position even if wind acts on door.
Push & Go				
22 PG	0 - 1		**0**	0 Off 1: • Door close mode parameter **hd** must be set to "0" (automatic) to enable this function. 1. When set to 1, parameter is activated. • Automatic opening of door is started when door is manually moved 4° out of the closed position.

A.1.1 Driving parameters detail.

Parameter	Value range	Units	Factory setting	Description	
Mode switch type					
23 PS	0 - 4		**0**	0	Internal, operator mounted mode switch is active.
				1	External mechanical mode switch with contacts is connected to operator terminal board. Internal mode switch connector must be removed.
				2	External DCW electronic mode switch (EPS) is connected to operator terminal board. Internal mode switch connector must be removed.
				3	Mode switch control by TMS Soft control software.
				4	• DCW Mode switch (EPS) is installed, and operator is also connected by the building management system to TMS Soft control software. • When **PS** is set to 4, the Mode switch functions can be changed from DCW (EPS) to TMS Soft..
DCW® Electronic mode switch (EPS) behavior following power reset					
24 S1	0 - 1		**0**	0	• In event of power failure, or if operator is deliberately switched off, EPS will automatically switch to last known position when power returns. • **Important:** The time at which power returns might not be during business hours and may affect insurance-compliant door locking requirements.
				1	• In event of power failure, or if operator is deliberately switched off, EPS will automatically switched to OFF position when power returns. • This function should be used if insurance compliant locking if required.
Internal program switches, switch on delay					
25 S2	0 - 1		**0**	0	Operator will perform function of new switch setting as soon as internal program switch is moved.
				1	• Operator will perform function of new switch setting after a delay of 10 seconds from when internal program switch is moved. • This function is useful if user has to pass through door and its connected detectors and sensors after program switch is set to new function.
Unlocking during business hours					
26 du	0 - 1		**0**	0	Door is always locked when it reaches closed position.
				1	• In automatic mode, door will not lock when it reaches closed position. This achieves faster door opening when system is equipped with motor driven locks. • If an electric strike opener is used, it must be suitable for 100% continuous duty factor to avoid possibility of damage.

A.1.1 Driving parameters detail.

Parameter	Value range	Units	Factory setting	Description	
Status relay function, X7 terminals				0	Status relay is deactivated.
27 Sr	0 - 6		**1**	1	Status relay activated as soon as door reaches door "closed" position.
				2	Status relay activated as soon as door reaches door "open" position.
				3	Status relay activated when error codes are displayed on 2 digit operator display.
				4	"Door closed and locked" activates status relay.
				5	Status relay activated when information or error codes are displayed on 2 digit operator display.
				6	• Status relay activated when door is opened further than opening angle parameter **OA**, set during learning cycle. • Parameter **OA** value can only be changed using dormakaba handheld or by performing another learning cycle.
Locking device output configuration; output X3, 1G (24V) and input X6, 4/4a				Reference Chapter 8.	
28 bE	0 - 1		**0**	0	Locking device output terminal X3, 1G (24V) is independent of Input X6, 4/4a.
				1	• Locking device output terminal X3, 1G (24V) is turned on as soon as contact at X6, 4/4a is opened.. • Terminal X3, 1G 24V output is on for as long as contact at X6, 4/4a is open, motor lock with a 100% duty factor is required. • This function is not available for DCW motor locks.
Cycle counter				• Total number of opening and closing cycles displayed is shown in increments of 10000; Display value, "4", 40,000 cycles, Display value, "53", 530,000 cycles. • Total number of cycles can be displayed on dormakaba handheld. • A display value of "99" means 990,000 cycles or greater.	
29 CC	0 - 99 * 10000	cycles			
Delete error log					
30 EC	0 - 1		**0**	0	No function.
				1	1. When "1" entered, Error log is deleted. • Parameter is then automatically reset to "0".
Reset service interval display, operator yellow LED					
31 CS	0 - 1		**0**	0	No function.
				1	1. When "1" entered: • Service cycle counter is reset to 200,000. • Service interval is reset to 12 months. • Yellow LED not illuminated. • Parameter is then automatically reset to "0". • Values other than default values must be set using dormakaba USA, Inc. handheld: • Maintenance interval • Maintenance cycles

A.1.1 Driving parameters detail.

Parameter	Value range	Units	Factory setting	Description
Factory setting level				Parameter **SL** is used to determine what data will be reset during factory setting process.
32 SL	1 - 2		**1**	**1 Reset Standard factory settings (SL=1 default)** 1. Mode switch: CLOSE. 2. Door closed. 3. Press 4 button keypad down button ▼ for greater than 8 s. • All parameters reset to factory settings. • Procedure completed when "8" on 2 digit displays blinks twice. • Installed upgrade cards remain valid and do not require reinstallation. 4. Learning cycle required. **2 Reset Extended factory settings (SL=2)** 1. Mode switch: CLOSE. 2. Door closed. 3. Set SL to 2. 4. Press 4 button keypad down button ▼ for greater than 8 s. • All parameters reset to factory settings. • Installed upgrade cards deleted from operator memory. • Parameter **SL** automatically reset to 1. • Control unit and upgrade cards can be used independently (delivery status). • Procedure completed when "8" on 2 digit displays blinks twice. 5. Learning cycle required..
Opening angle				• Door opening angle set during learning cycle is displayed. • Opening angle can only be changed during learning cycle. • Due to installation and parameter tolerances, display value may not match actual door position.
33 OA	0 - 110	°		
Door closer mode				
34 hd	0 - 1		**1**	0 **0**=Automatic mode. This mode is applicable whenever door is mainly opened automatically and where motion detectors are installed. • Mode is optimized for high frequency use. • Full energy upgrade card provides for higher door opening and closing speeds. • In case door is blocked during a closing cycle, operator reverses automatically. • Driving phase is optimized to provide reliable closing cycles. • Keep closed force (wind load control) parameter **FH** and Push & Go function parameter **PG** are only available in automatic mode. 1 **1**=Manual mode. This mode is applicable whenever door is mainly used manually and only rarely automatically. • In case door is blocked during a closing cycle, door will stop at its current position. • Driving phase optimized for manual opening cycles. • Power assist function parameter **hf** is only available in manual mode.
Power assist activation angle				• Setting of door activation angle for Power assist function (**hF**). • Higher settings of **hA** result in better spring force compensation for easier manual opening. • Power assist function is more sensitive the smaller the activation angle.
35 hA	1 - 5	°	**3**	

A.1.1 Driving parameters detail.

Parameter	Value range	Units	Factory setting	Description
Power assist function				• Force setting for Power assist function. • Power assist function only available with **hd** parameter = 1, manual mode. • "0"; power assist function OFF. Power assist function enabled for available values greater than 0. • Power assist function enabled when power assist activation angle **hA** reached. • The greater the value of **hF**, the easier the door can be manually opened from power assist activation angle **hA**. • If power assist set too high, door can open automatically. • Power assist function is not available • If operator is switched off., A smoke detector or emergency button has been triggered.
36 hF	0 - 10		**0**	
Additional Power assist function support from 00				• Setting for additional power assist function support from 00. • The greater the value of **hS**, the easier the door can be manually opened from 00.
37 hS / hS	0 - 99		**0**	
A1.1.1 Upgrade card units codes				
	0 - 3		**0**	0 Upgrade card not installed, function not available. 1 Upgrade card installed, function not activated. 2 Upgrade card installed, function activated. 3 Upgrade card has been removed, function no longer available.
Upgrade card fire protection				1. Activate function by installing upgrade card, parameter value will automatically change to 2 (upgrade card function installed, fire protection function activated). • Following activation, drive may be used as a electrically controlled hold-open system according to EN 14637, Building hardware-Electrically controlled hold-open systems for fire/smoke door assemblies, or similar standards. • Full energy function (**F2**) is automatically activated (ED100/ED250). • Plug for terminal board X9 socket included with upgrade card.
38 F1	Available upgrade card codes (Para. A1.1.1) 0, 2, 3		**0**	
Full energy– upgrade card not required to enable function.				**ED50: low energy only** (ANSI/BHMA A156.19)**.** • F2=0, no parameter adjustment.
39 F2	Available upgrade card codes (Para. A1.1.1) 0, 2, 3		**0**	**ED100/ED250** • F2 default is 0, low energy (ANSI/BHMA A156.19). 1. To activate **Full energy function** (ANSI/BHMA A156.10) change parameter **F2** to 2. • The full setting range of parameters **So, Sc, Fo** and **Fc** will be available after the activation. • **SL** (Factory setting level) of 2 will reset **F2** to 0.
40 F3			**0**	Not used.
41 F4			**0**	Not used.
42 F5			**0**	Not used.

A.1.1 Driving parameters detail.

Parameter	Value range	Units	Factory setting	Description
Upgrade card barrier-free toilet				1. Once upgrade card installed, parameter value will automatically change to 1 (upgrade card installed, function not activated). 2. Activate function by changing parameter **F7** to 2. 3. Operator power reset is required; turn power switch off, wait 10 s and turn power back on. • Upgrade card assigns inputs and outputs of the control unit with functions which are required for this application.
43 F7	Available upgrade card codes (Para. A1.1.1) 0, 1, 2, 3		**0**	
Upgrade card DCW				1. Activate function by installing upgrade card, parameter value will automatically change to 2. • Upgrade card provides operator with DCW bus connection. • Plug for terminal board X8 socket included with upgrade card. • DCW bus enables connection of: • Program switch EPS DCW (max. 2) • Motor lock controls SVP-S 2x DCW (max. 2) • Motor lock SVP 2000 (max. 1) • RM-ED lintel mounted smoke detector • Key switch button ST 32 DCW (max. 2) • I/O module DCW (max. 1)
44 F8	Available upgrade card codes (Para. A1.1.1) 0, 2, 3		**0**	
COM 1 configuration interface				
45 C1	0 - 1		**0**	0 Interface programmed for communication with dormakaba handheld. 1 Interface programmed for use with dormakaba TMS Soft control software.
Backcheck when door opened manually				• Angle after which door is braked when manually opened. • Back check level is automatically optimized during manual door opening cycles. • **bc** function improves door braking behavior in end position so door does not move beyond set opening angle **OA** 1. Entered **bc** value is subtracted from set opening angle **OA**, example: • Opening angle, 90°: Parameter **bc**, 12°, door back check starts at 78°.
46 bc	5 - 40 (v1.9)	°	**10**	
Door thickness				1. Enter parameter **Td** in mm. • Door thickness affects measured door opening angle. • Parameter **Td** enables a more accurate door width to be entered, if required.
47 rd	0 - 99	mm	**35**	
47 Td	0 - 3 7/8"		1 3/8"	
Deactivation of drive; X6, 4 and 4a, trigger type				
48 d1	0 - 1		**0**	0 NC contact, drive function is deactivated when NC contact is open. 1 NO contact, drive function is deactivated when NO contact is closed.
Night-bank contact X1; 3 and 35, trigger type				

A.1.1 Driving parameters detail.

Parameter	Value range	Units	Factory setting	Description	
49 d2	0 - 1		**0**	0	1. NO contact, night-bank function is triggered when NO contact is closed. • Typically used when using a key switch or an access control system.
				1	1. NC contact, night-bank function is triggered when NC contact is opened. • Typically used when connected to building management system to trigger doors (signal normally present).
Release of hold-open system					
50 FC	0 - 1		**1**	1	1. Upgrade card Fire Protection installed. 2. Set parameter **FC** to 1. Users may release hold-open by manually moving door in closed direction. • A manual release button is not required.
				0	• Hold-open release by manually moving door in closed direction is deactivated. • A manual release button is required.
Castor angle for double doors				Primary door with astragal, angle active door must open before secondary door opens.	
51 Ad	0 - 30	°	**30**		
Hinge clearance				• Clearance between hinges is critical for the calculated door angle. • **HS** parameter may only have a small effect but the hinge clearance can be adjusted in extreme cases to improve accuracy. • Factory setting is 3 * 10, 30 mm, 1 3/16". • With CPD doors, setting must be changed to a negative value. A learning cycle is then required as system creates an angle table as a function of the set parameters.	
52 HS	± 5 *10	mm	**3** *10		
	±3/16 *10	inches			
Overhead concealed mode (OHC): Activation of permanent open via night-bank input					
53 S3	0 - 1		**0**	0	Function disabled.
				1	If night-bank signal is longer than 3 seconds, operator changes to permanent open mode.
Overhead concealed mode (OHC): Adjustable behavior after blockage / hold open					
54 S4	0 - 1		**0**	0	Standard behavior (3 x restart).
				1	Manual mode after blockage.
Reversing after trigger of approach side safety sensor / opposite hinge side in operating mode hd=1					
55 S5	0 - 1		**0**	0	Standard behavior, stop.
				1	Reversing

Appendix B - Troubleshooting

B.1 Information and error codes

1 4 button keypad
2 2 digit display

Fig. B.1.1 User interface

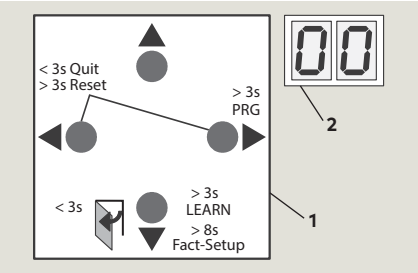

3 Power switch
4 Red LED
5 Yellow LED
6 Green LED

Fig. B.1.2 Operator LEDs

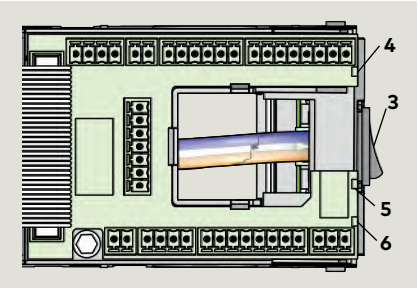

7 Mode switch, Close position

Fig. B.1.3 Mode switch

TIPS AND RECOMMENDATIONS

Para. B.3, Information codes
Para. B.4, Error codes

B.1.1 Overview

Operator monitors internal circuits and external safety circuits managed by the operator.

B.1.2 Error and information messages.

1. With operator in use, certain conditions may develop resulting in error or information messages.
2. Operator attempts to identify the cause and respond accordingly.
3. Response depends on the severity of the error:

- Information message (**In**)
- Error message (**E**)
- Deactivating the operator's automatic function; operator will switch to emergency mode. Users can then access door manually.

B.1.3 User information display.

User interface display, or dormakaba handheld displays:

- Information **In** codes
- Error message **E** codes

B.1.4 Viewing error messages.

To access and view error messages, briefly press the right ▶ button on the 4 button keypad.

B.1.5 Red LED on operator .

Red LED adjacent to operator power switch displays blinking codes for:

- Certain **In** information
- **E** error codes (Para. B.2)

B.1.6 Resetting error codes.

Options for resetting error codes:

1. Set Mode switch in Close (off) position.
2. User interface Reset buttons:

- Press both left ◀ and right ▶ buttons >3s to reset system (v1.8).
- Header cover must be opened to access user interface.

3. Power reset:

- Turn power switch OFF.
- Turn power switch back on after 10 seconds.

CAUTION

Always analyze and remove cause for error before resetting error message!
Troubleshooting charts (Para. B.3,.4) are intended as a guide for diagnosing errors.

B.1.7 Error message memory.

1. There are ten error message memory locations; E 0 through E 9.
2. The latest error message is always stored in error memory location E 0:

- As soon as another error occurs, the existing error stored in E 0 will be moved to E 1 and the latest error will be stored in E 0.

3. A maximum of 9 errors can be stored in memory locations E1 through E9.
4. Identical error messages occurring one after another are not stored again.

B.2 Red LED status codes

B.2.1 Red LED status codes.

Red LED status	Display	Description
Steady flashing		Control unit has detected error, emergency mode activated.
On steady	In 11	Hold-open device triggered.
Flashing 2 times	E 02	Locking device error.
Flashing 4 times	E 04	Safety sensor test error.
Flashing 5 times	E 25	SVP PR DCW module test negative.
	E 26	Brake error
Flashing 5 times	E 51 E 52 E 53	Incremental encoder error.
Flashing 6 times	E 62	Double door operation, 2nd system has incompatible firmware version.
Flashing 6 times	E 63	Double door operation, 2nd system has incompatible fire protection setting.
Flashing 7 times	E 71	System error 1 (test), second shutdown option.
Flashing 7 times	E 72	System error 2 (test), current measuring circuit.
Flashing 7 times	E 73	System error 3 (test), braking circuit
Flashing 12 times	E 12	EEPROM error
Flashing 13 times	E 13	Motor overcurrent
Flashing 15 times	E 15	Faulty learning cycle

B.3 Troubleshooting chart, "In" codes

B.3.1 Troubleshooting chart, information messages.

No.	Display	Red LED	Description	Troubleshooting information messages
	In 01	Off	**Obstruction** Door obstructed by an obstacle or person; door movement stopped by operator.	Sustained operation on a door with an obstruction can result in damage to drive. 1. Object or person obstructing door movement. • Check door movement while system is deenergized. • Remove cause of anything obstructing door movement. 2. Sensor detection range too small. • Obstructions are often caused by people using door due to sensor's detection range not matching operator's opening speed. Door is unavoidably contacted by person using door. • Sensors detection range should be increased and/or operator's opening speed should be increased. 3. Test system operation after cause of obstruction found.
2	In 08	Off	**Deactivation of drive function.** • Contact at X6, 4 and 4a is opened. • Operator switched to emergency mode, door can only be used manually.	An emergency close switch, lock switch, or other system safety device may be connected to the X6 input. • One of the activators connected to X6 may have opened, or a defect is present. 1. Reset the applicable activator. Operator should start operation automatically. • If In 08 still present, check activators or system wiring.
3	In 09	Off	**Upgrade card error.** • Installed upgrade card has been removed. • If two upgrade cards were installed, the upgrade card installed first (container module) has not been reinstalled or is defective.	1. Installed upgrade card cannot be removed. • If more than one upgrade card is installed, the first card installed becomes the container module. • The container module must be installed last, after all other Upgrade cards are installed. 2. If container module is defective, first upgrade card (container module) must be replaced and all other upgrade cards must be reinstalled.
4	In 11	On	**Hold-open system triggered.**	1. Hold-open system can be triggered: • Automatically by smoke detector or building interface system. • Manually by a manual release button. • Manually moving door. 2. The system must be reactivated by a deliberate action. 3. Depending on system's configuration, reactivation can be done by: • Manually moving door to taught opening angle. • Switching program switch to Close (off). • Pressing both 4 button keypad left ◀ and right ▶ buttons greater than 3s. 4. It must be ensured that a smoke detector or building interface has not been triggered. 5. If reactivation is unsuccessful, there may be a defect in the smoke detector or building interface system or its connections.
5	In 23	Off	**Locking alarm.** • Door is blocked while in the closed position.	• Most common cause of this error is the drive unit attempting to open a locked door. 1. To eliminate the occurrence of this error, install a lock status switch. • Lock switch detects the lock pin's switching status and switches the drive unit off if necessary. • It is recommended to use a lock status switch, as repeated attempts to open a locked door may damage the drive unit or the door.

B.3.1 Troubleshooting chart, information messages.

No.	Display	Red LED	Description	Troubleshooting information messages
6	In 61	Off	**Communication error, double door system.** • No communication between the two operators.	1. Check communication cable connection at the two operators. • Cable connects to the horizontal RJ 45 connector next to the user interface. Check communication cable.
7	In 72	Off	**Current measuring circuit.** • System could not successfully perform internal current measuring test , performed once every 24 hours.	• The initial current measuring test my not always be successfully completed due to system tolerances and environmental conditions. • The test may also fail, as an example, if someone uses the door while the test is in progress.
8	In 73	Off	**Braking circuit test.** • System could not successfully perform internal braking circuit test , performed once every 24 hours.	• The initial braking circuit test my not always be successfully completed due to system tolerances and environmental conditions. • The test also may fail, as an example, if someone uses the door manually while the test is in progress. • If the cyclical test fails ten times in a row, error message **In 73** will be displayed.
9	In 91	Off	**DCW communication.** • At least one registered DCW device is missing.	1. Reconnect the corresponding DCW device. 2. If this is not possible, reactivate the drive. Reactivation can be done by: • Switching program switch to Close (off). • Pressing both 4 button keypad left ◀ and right ▶ buttons greater than 3s.

B.4 Troubleshooting chart, "E" codes

B.4.1 Troubleshooting chart, "E" codes.

No.	Display	Red LED	• Description	Troubleshooting error codes
1	E 02	Flashing 2 x	**Locking device error.** • Operator is attempting to open or close a locking device with feedback, or a DCW locking device. An error has occurred during this process.	• Probable causes are a defective locking device or wiring defect. 1. Check the locking device and feedback system.
2	E 03	Flashing 3 x	**DCW program switch is missing.**	1. Check the DCW program switch and its connections.
3	E 04	Flashing 4 x	**Safety sensor test error.** • Test of moving safety sensors was unsuccessful.	• Factory setting level of "safety sensor test" parameter **ST** is 0, test off (Appendix A, Parameter detail). • When **ST** is configured to installed safety sensors, a test signal is sent to the sensors before each door opening or closing cycle. Operator waits for a response within a certain time window. • Check whether parameter **ST** has been configured to the installed safety sensors and their active-high or active-low signal level. • Check for activation of the test at the safety sensors.

B.4.1 Troubleshooting chart, "E" codes.

No.	Display	Red LED	• Description	Troubleshooting error codes
4	E 12	Flashing 12 x	**EEPROM error.** • Internal memory check could not be completed. • Drive unit works in door closer mode.	• Using dormakaba handheld, reload current firmware to reinitialize system. • If the error is still present, the control unit must be replaced.
5	E 13	Flashing 13 x	**Overcurrent detection.** Motor is consuming more current than drive unit can provide.	• Motor is consuming too much power, check for any external causes. • Drive unit or control unit is defective. • If error repeats, operator must be replaced.
6	E 15	Flashing 15 x	**Faulty learning cycle.** Learning cycle could not be completed (Chapter 12).	• Error may occur if learning cycle has been interrupted, for example if door movement has been interrupted during the learning cycle. • Learning cycle must be repeated.
7	E 25	Flashing 5 x	**SVP-PR 12 power reserve module test negative.**	• See Appendix A, parameter **TS**, Power reserve module test. • Check power reserve module and its wiring.
8	E 26		**Brake error.**	Reference Chapter 21, Maintenance. Para. 21.4 - Brake maintenance. 1. Brake error during learning cycle. • Check brake wire connections on X3 terminal strip. Verify wire insulation has been properly stripped from end of wires and wires are secured under terminals. • Red wire terminated on 1G, black wire on 3. Reference Figure 21.4.8, brake wiring. 2. Verify that the only wiring on X3 terminals 1G and 3 are the brake wires. 3. Brake air gap tolerance issue. • Brake air gap adjustment. Reference Para. 21.4.1, Adjustment of air gap. Brake power (1G: +27 Vdc, 3: 0V). • ON when door is in fully opened position. • OFF when hold-open time expires.
9	E 51 E 52 E 53	Flashing 5 x	**Incremental encoder error.** • Motor gear unit encoder monitoring detected a faulty state.	1. Check encoder plug connection at operator. • Secure connection. • Wiring terminations • Short circuits. 2. Check locking device for short circuits. • Error can be caused by defective motor or short circuit in locking device. • Motor gear unit must be replaced in event of defective motor.
10	E 62	Flashing 6 x	**Incompatible firmware version,** double door system, second system.	• Equip both operators with same firmware version.

B.4.1 Troubleshooting chart, "E" codes.

No.	Display	Red LED	• Description	Troubleshooting error codes
11	E 63	Flashing 6 x	**Incompatible fire protection setting**. double door system.	• For double door systems, the Upgrade card fire protection must be installed in both control units.
12	E 71	Flashing 7 x	**System error 1, 2nd shutdown option.**	• In order to reliably switch off the drive unit, several switching elements are used and their functions are tested periodically. • If the function test always results in the error code, the control unit must be replaced.
13	E 72	Flashing 7 x	**System error 2, current measurement circuit.**	• The current measurement circuit is part of the safety mechanisms and its function is tested periodically. • If the function test always results in the error code, the control unit must be replaced.
14	E 73	Flashing 7 x	**System error 3, braking circuit.**	• The braking circuit is a safety element in the closer mode and will be tested every 24 hours. • During the test the motor is shut down during door closing and the door closes at a set angle in emergency mode. • Test can be noticed as a short jerk on the door and is normal. • Error can be due to door closing in the deenergized state too fast (under 3 seconds). See Chapter 9, Power fail closing speed. 1. Check the closing speed and reduce if necessary.
15	PF		**Short circuit of 24 V supply voltage.**	1. Eliminate short circuit.
16	- 1		**Energy management.** • Motor is too hot (for example, too high an ambient temperature) • System responds automatically.	1. Movement dynamics in the closed direction will be reduced.
	- 2			2 Movement dynamics in both the open and closed directions will be reduced.
	- 3			3 System shuts down for 3 minutes (door closer mode).
	- 4			4 Hold-open time will be extended.

Appendix C - dormakaba handheld

C.1 dormakaba handheld terminal

Fig. C.1.1 dormakaba handheld

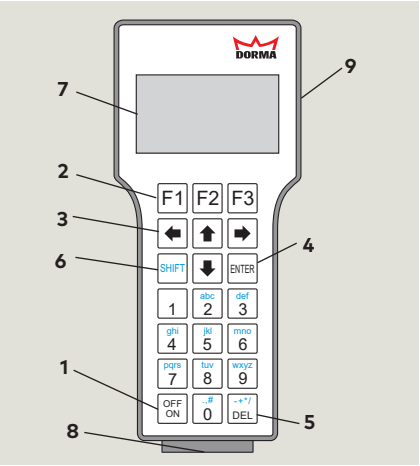

1 Off/On key
2 Function keys
3 Arrow keys
4 ENTER key
5 DEL key
6 SHIFT key
7 Alpha numeric keyboard
8 LED, recharging battery status (Off when batteries fully charged)
9 SD card slot

C.1.1 Interface cable

Use dormakaba interface cable (Article No. 16596101170) to connect dormakaba handheld to operator
Com 1 interface.

CAUTION

Never use conventional network cable with RJ45 plug! Using conventional cable may result in permanent damage to operator!

Fig. C.1.2 Com 1 interface

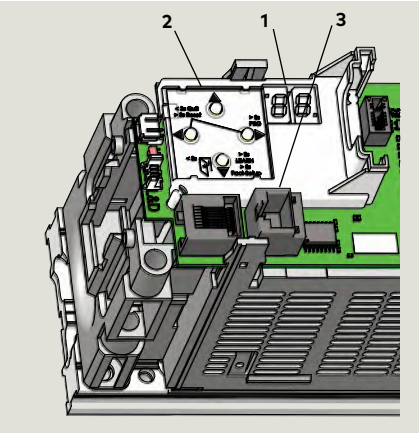

1 2 digit display
2 4 button keypad
3 Com 1 interface

C.1.2 Handheld key functions.

1. OFF ON, switches Handheld on or off.
2. Function keys F1 - F3, trigger functions shown in bottom line of display (e.g., "RPT" for repeat, "UP" and "DOWN" to switch lines, "UpDoLd" for file up and download, "CHANGE" to change values, "OPEN" to trigger opening pulses.
3. Arrow keys, allow navigation within the display. Use left arrow to get back to previous screen.
4. ENTER, selects individual menu items and confirms changes of values and settings.
5. DEL, deletes figures or letters.
6. SHIFT, switch between figures and letters or small and capital letters. Current function is indicated on display (n: numeral, A: capital letters, a: small letters).
7. Alpha numeric keyboard, allows entering values and file names in small and capital letters. There are several special characters (dot, comma, hash key, plus, minus, asterisk and diagonal slash).

C.1.3 Handheld startup.

1. Press OFF ON to turn on Handheld terminal.
2. Screen displays Current version, creation date and name of data base. Handheld is ready for operation.
3. Select "COMMUNICATION" and enter user code (dormakaba original setting: 123456).
4. Handheld displays current software version of the connected operator (e.g., Ed100 SW- V2.3.0).

C.1.4 Downloading current parameters.

1. Press function key F2 "UpDoLd" to access menu "UP/DOWNLOAD".
2. Select "Download" to download current adjustments and parameters. System stores this data as temporary file under file name "temp.tab".
3. Every change in configuration, parameter setting or special functions confirmed with the "ENTER" key automatically uploads to the operator.
4. The Handheld does **not** automatically save the changes. The Handheld will prompt you to save the changes when quitting the menu.

C.1.5 Menu structure

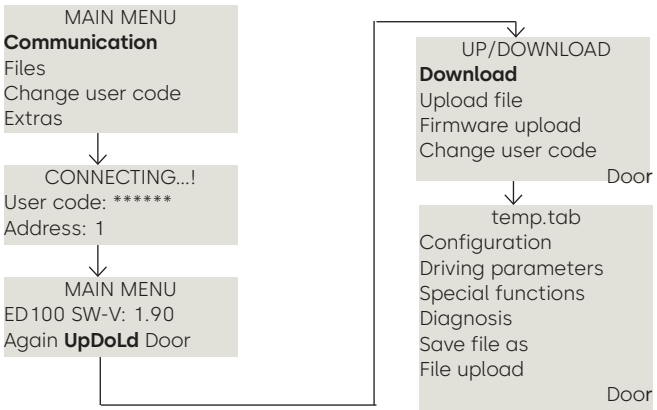

C.2 New dormakaba handheld; language change to English

Fig. C.2.1
dormakaba handheld

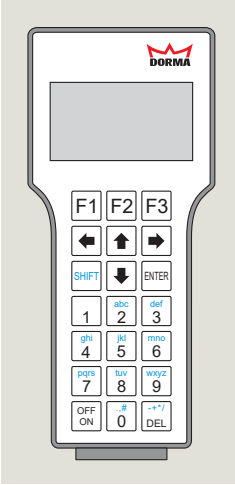

C.2.1 New dormakaba handheld; language change.

If German language is displayed on screen when handheld is first turned on (Fig. C.6.2, handheld power on sequence), use following steps to change to English.

Fig. C.2.2 HAUPTMENUE (main menu)

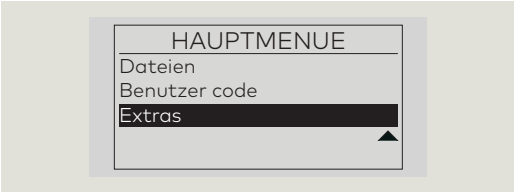

1. Scroll down Main Menu to EXTRAS:
- Press ⬇ 3 times to highlight EXTRA.

Fig. C.2.3 Main Menu; EXTRAS highlighted.

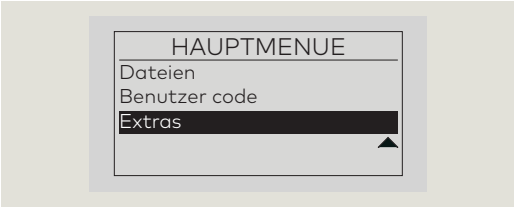

2. Press ENTER to select EXTRAS menu.

Fig. C.2.4 EXTRAS menu

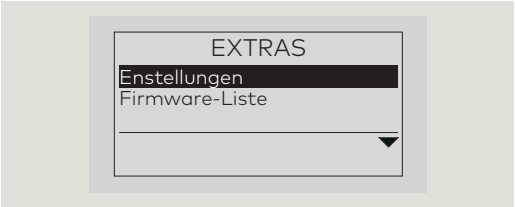

3. Press ENTER to select EINSTELLUNGEN (Settings) menu.

Fig. C.2.5 EINSTELLUNGEN menu

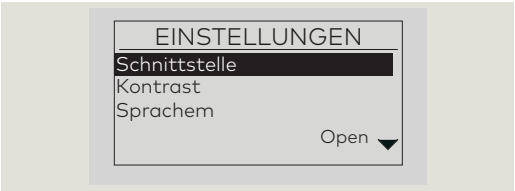

4. Scroll down EINSTELLUNGEN Menu to Sprachen (Languages):
- Press ⬇ twice to highlight Sprachen.

Fig. C.2.6 Sprachen highlighted

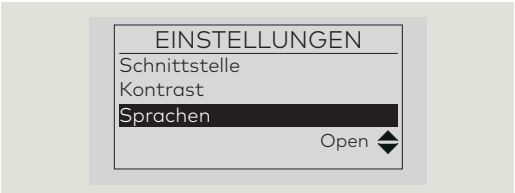

5. Press ENTER to select Sprachen (Fig. C.2.8).

Fig. C.2.7 Sprachauswahl (Language Selection) menu

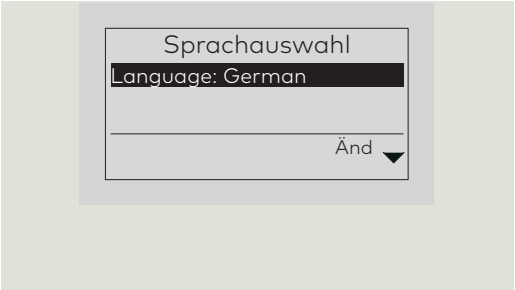

6. Press F3 to select Änd (Amendments).

Fig. C.2.8 SPRACHEN menu

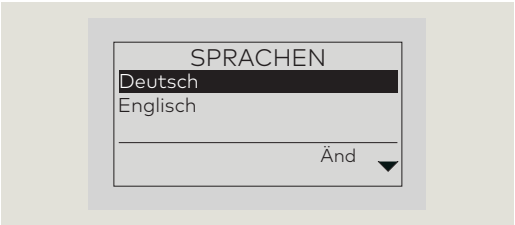

7. Scroll down SPRACHEN menu to Englisch: Press ⬇ once to highlight "Englisch"

Fig. C.2.9 Englisch highlighted

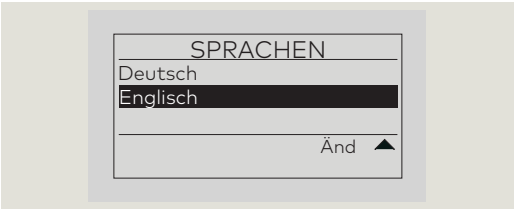

8. Press ENTER to select Englisch.

Fig. C.2.10 SETTINGS menu

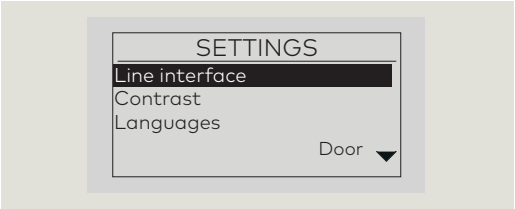

TIPS AND RECOMMENDATIONS

Handheld programmer will retain English setting when unit is turned off. Change to English only required the first time the programmer is turned on "out of the box".

C.3 dormakaba handheld; firmware update

C.3.1 Firmware update procedure

CAUTION

For all firmware changes, set program switch to CLOSE and allow door to close completely before any updates are made!

Fig. C.3.1 Handheld power on sequence

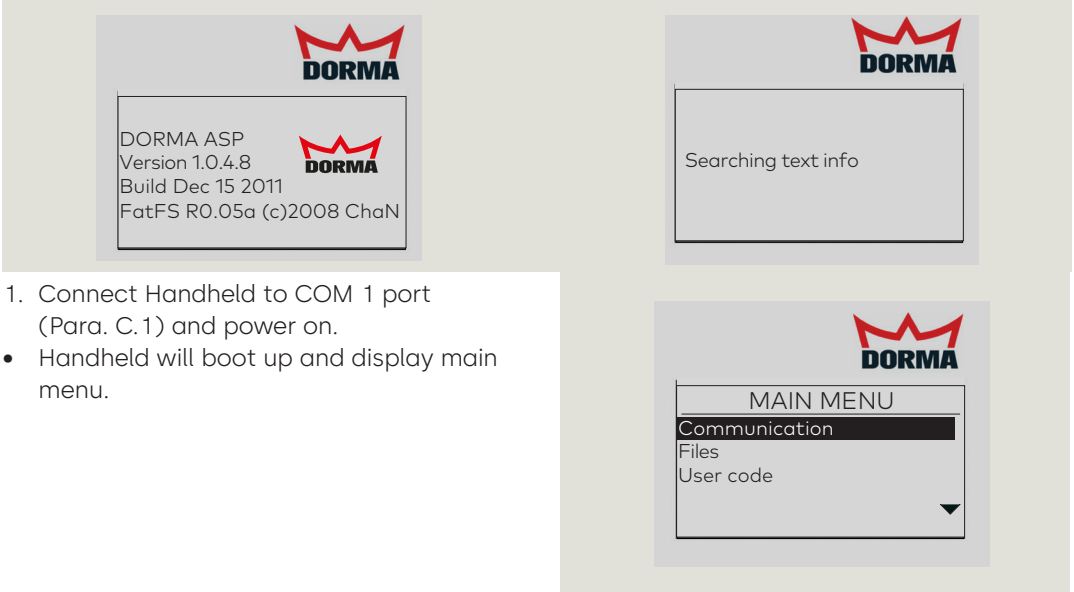

1. Connect Handheld to COM 1 port (Para. C.1) and power on.
- Handheld will boot up and display main menu.

Fig. C.3.2 Select communication menu

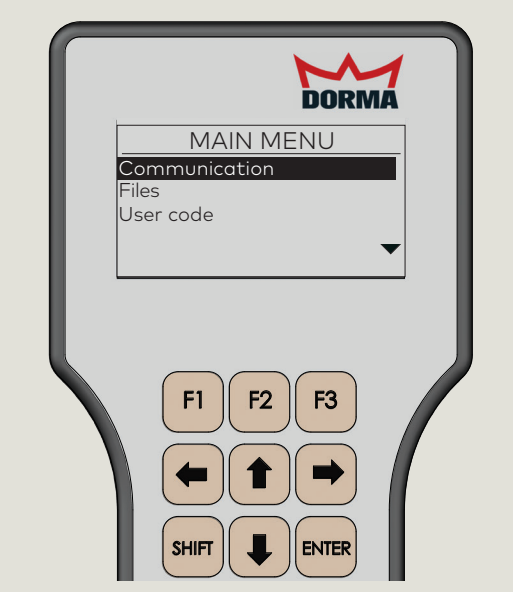

2. With Communication highlighted, press ENTER.

Fig. C.3.3 Enter Handheld user code

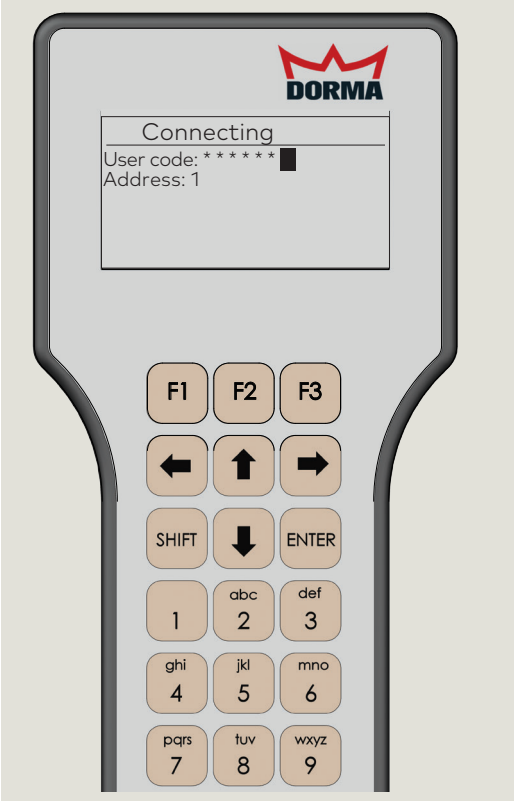

3. Enter handheld user code and press ENTER.

1 ENTER button

1 ENTER button
2 F2 button
3 Up/down arrows

Fig. C.3.4 Select UpDoLd

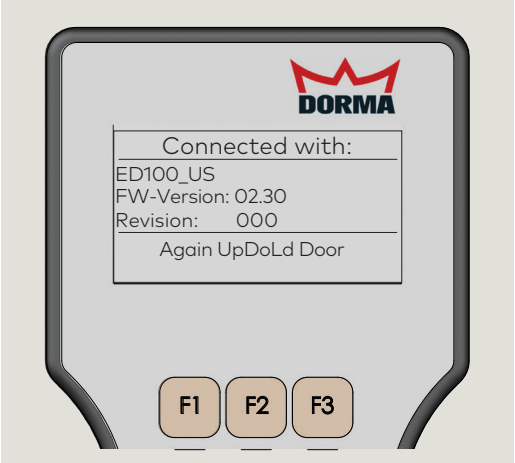

4. Press F2 to select UpDoLd.

Fig. C.3.5 Select Firmware upload

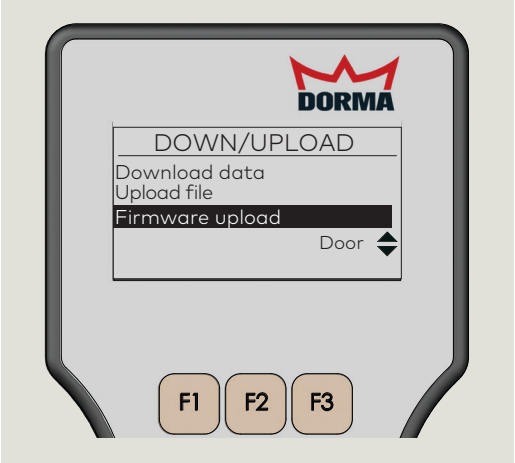

5. Use Up and Down arrows to select Firmware upload and press ENTER.

Fig. C.3.6 Select Firmware version

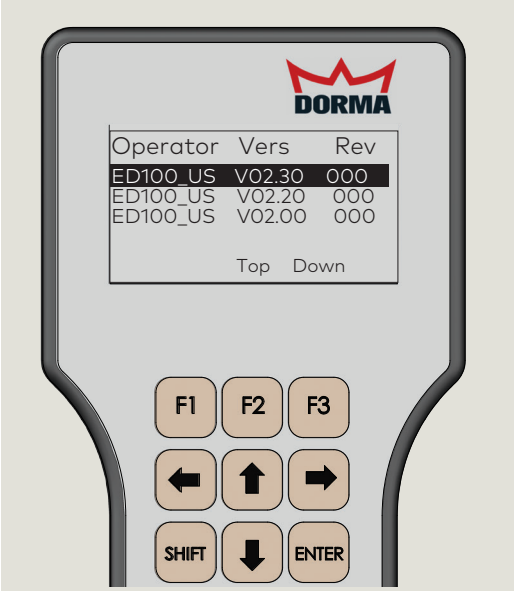

6. Use Up and Down arrows to select firmware version and press ENTER.

Fig. C.3.7 Start transmission

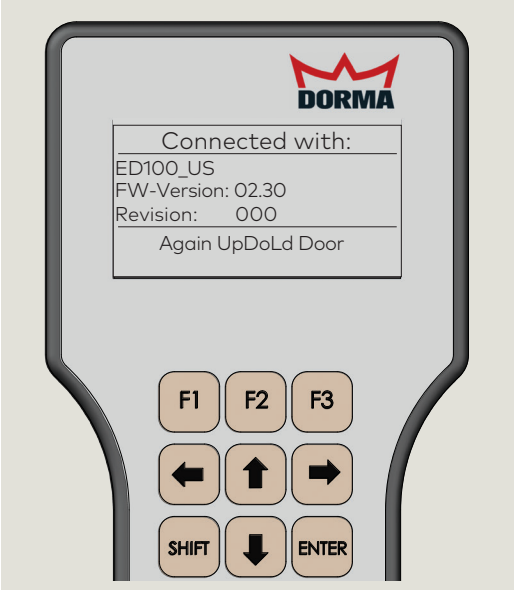

7. Press any key to start firmware transmission.

Fig. C.3.8 Firmware uploading

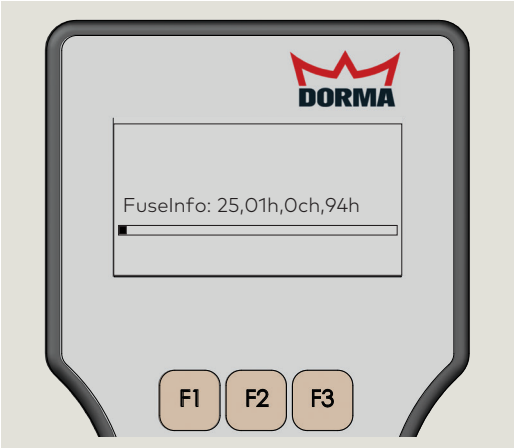

8. Firmware uploading to controller. Wait time of 3 to 5 minutes to upload.

Fig. C.3.9 Complete firmware update

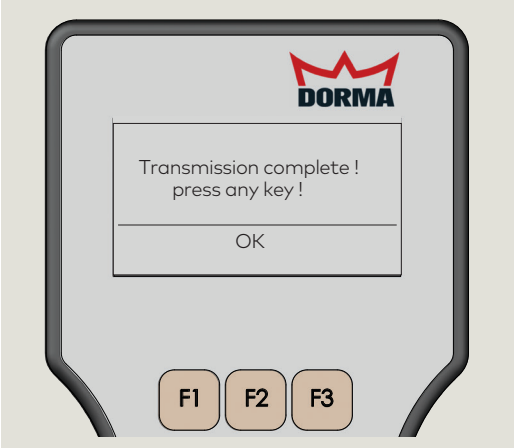

9. Press any key to complete firmware update.

Scan for product details and downloads.
Call 800-523-8483 or visit
automaticsupport.us@dormakaba.com
for assistance or warranty information.

dormakaba USA, Inc.
1 Dorma Drive, Drawer AC
Reamstown, PA 17567